Power range from 0.22 to 10 kW
(up to 35 kW on request)

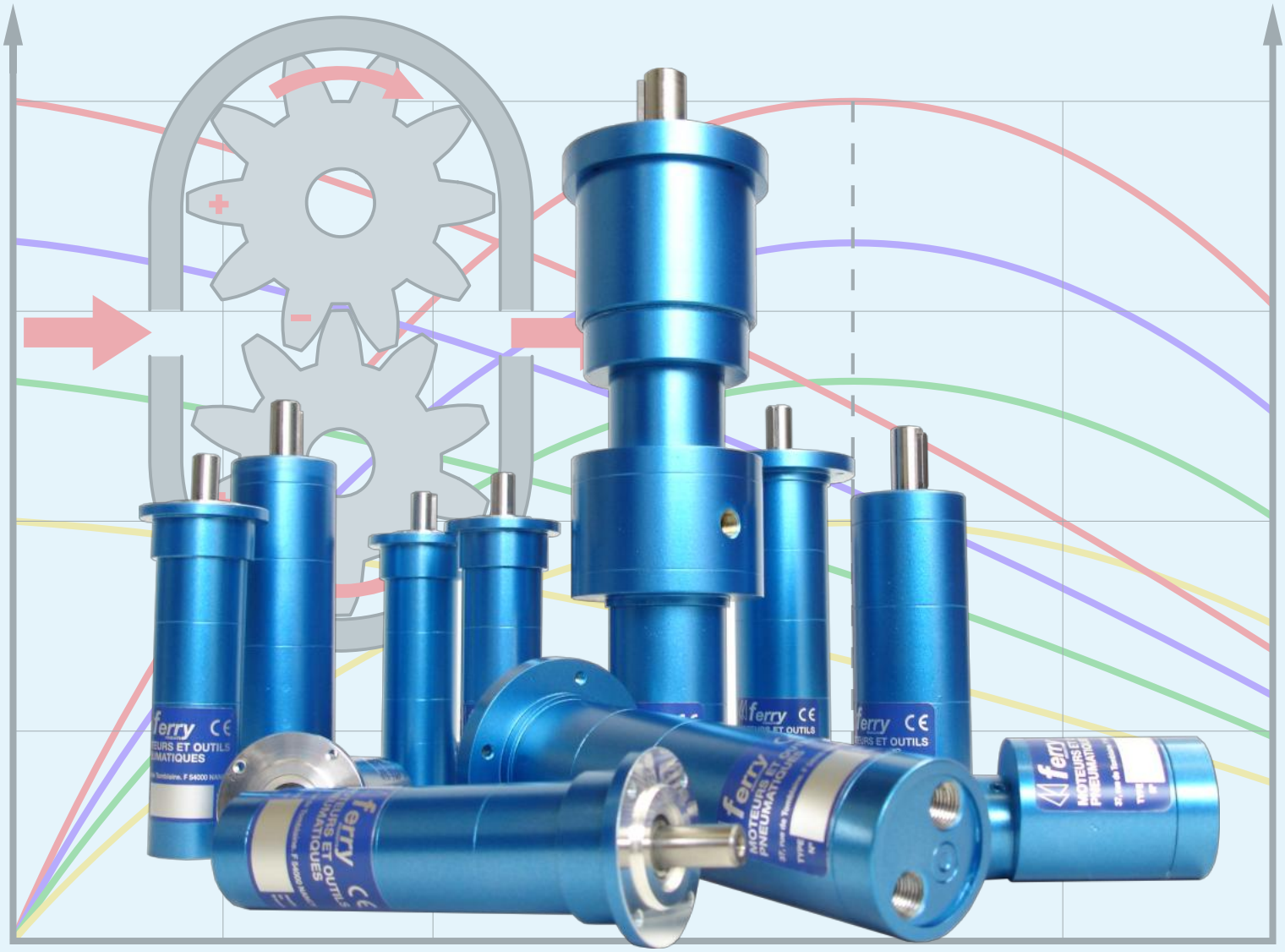

ATEX II 2 GD c T4-T6

ferry
PRODUITS

AIR MOTORS

WITH DOUBLE ROTOR ★ ★ ★ ★

DOUBLE ROTOR AIR MOTORS

SOME EXAMPLES OF USE OF OUR MOTORS

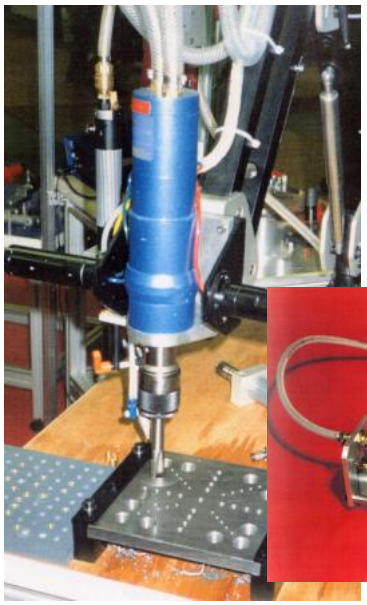

Drilling, tapping

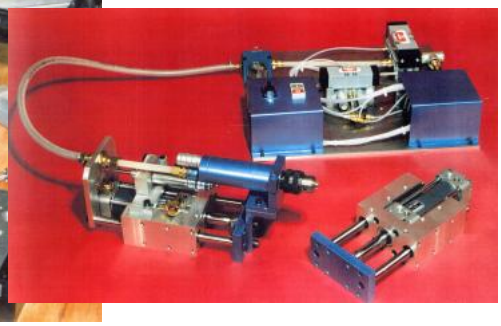

Mechanical drive of a reel

Protected gearmotor for corrosive atmosphere

Tightening

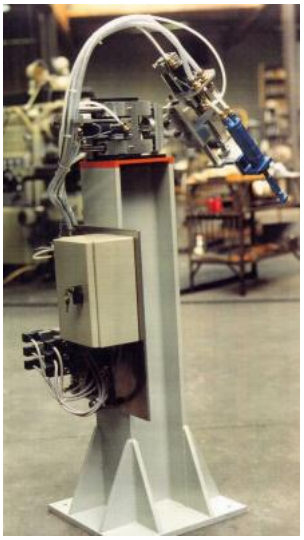

Coring

Process valve motorization

Air motor with bevel gearbox

ferry PRODUITS
3, Allée des Grands Paquis - BP 60102 - F-54183 HEILLECOURT CEDEX
Tel : +33 (0)3 83 35 22 97 - Fax : +33 (0)3 83 32 47 73

DOUBLE ROTOR AIR MOTORS

GEAR AIR MOTORS ARE AMONG THE MOST EFFICIENT AND COMPETITIVE EXISTING

Operation of gear motors

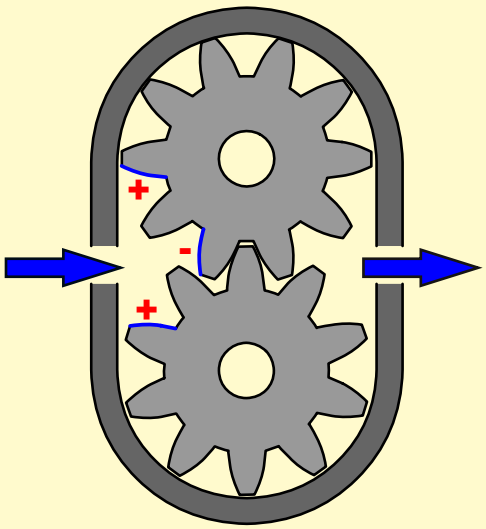

Thanks to this technology, the introduced air pressure is applied on three teeth, two positive (+) against one negative (-).

Result:
The starting torque is high and reliable, the flexibility of operation and the capacity of speed variation are very important.

Flexibility of operation	Excellent
Direction of rotation	Reversible by design
Starting torque	High, consistent and reliable
Start under load	Excellent
Start reliability	Approximately 100%
Torque and Power at low speed	High thanks to the round curve
Speed variation range	Unloaded: 100 to 1 Loaded: Up to 20 to 1
Torque stability with constant pressure in the range optimal speeds	Approximately 0,5%
Acceleration capability	Very important
Soft start capability	Excellent
Changing the direction of rotation, including on the fly ♦	Yes
Mechanical robustness	Excellent
Ability to work 24 hours/24	Yes
Possibility of stalling without heating	Yes
Operation factor	100%
Collectable exhaust	Yes
Resistance to cold and heat	-40°C to 90°C (-50°C to +120°C) ♦

♦ Under certain conditions, contact us.

ATEX Certification Classification II 2 GD c T4 to T6	Group II Catégory 2 For Areas : 1 and 2 (gas area) 21 and 22 (dust area)

ferry PRODUITS
3, Allée des Grands Paquis - BP 60102 - F-54183 HEILLECOURT CEDEX
Tel : +33 (0)3 83 35 22 97 - Fax : +33 (0)3 83 32 47 73

General units

Force (N)
1 Newton = 0,10197 kgf
Torque (Nm)
Force multiplied by a lever arm - Meter Newton
Pressure (Pa)
Legal unit (Pa): 1 Pascal = 10^{-5} bar.
Usual unit (Bar): 1 Bar = 1 .0197 kgp/cm² = 10^5 Pa
Anglo-saxon unit (psi): 1 bar = 14.5 psi
Angular speed (rad/sec)
Radian per second. 1 r.p.m = 0,1047 rad/s
Work energy (J)
Joule: Force intensity multiplied by the displacement in the direction of the force.
Power (W)
Work divided by time : 1 Watt = 1J/s
Horse power (HP) : 1 HP = 736 W

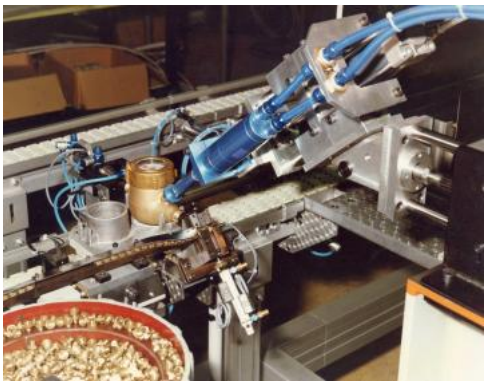

Plugs screwing station on water meters (air motor NF22424).

As the air is an elastic fluid, reducing the volume increases the pressure and the temperature. Inversely, increasing the volume reduces the pressure and temperature.

The compression of air creates potential energy which can be partially released in a motor, a cylinder, etc…

To improve the overall efficiency of the installation, the power consumed by the motor must perfectly balance resistant power, this by regulating the air pressure.

The purpose is to obtain a good operation with the accurate pressure and the motor must run only during its effective work.

The depression of the air cooling the motor, this allows to ignore the duty cycle.

The integrated speed reducers (of excellent quality with allied steel gearings like 35CD4, 35NCD16, etc...) are calculated and proven for medium chocks of the receiver equipment. For larger shocks, the air pressure must be lowered.

Torque, power and consumption specifications

Torque curve according to speeds is similar to that of a DC electric motor. The motor will not heat up at any point on the curve.

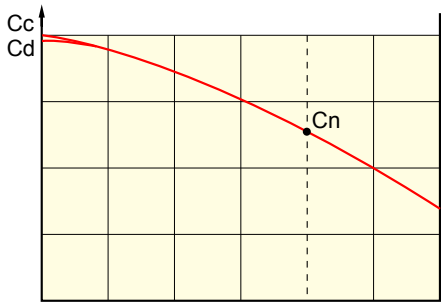

The starting torque "Cd" is almost equal to the stalling torque "Cc".

The figures below shown are specific consumption curves, in other words the consumption relative to the power.

We note that the optimal operation is located between 30% and 70% of the speed at maximal power.

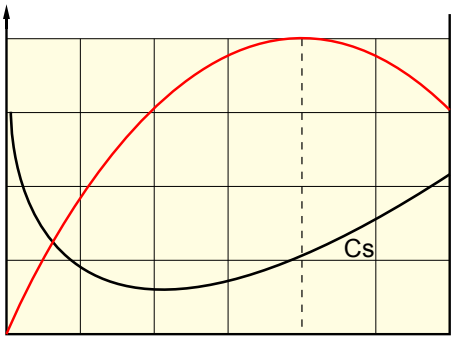

The torque is almost proportional to the pressure.

Our motors can work with a minimum pressure of 1 bar.

If the resistant torque is stable, the speed adjustment is made through a pressure regulator.

From 10% of the speed at max power, the speed stability is ensured if the torque of the motor is in stable balance with the resistant torque.

If the resistant torque varies, it is necessary to operate the motor at slightly higher speed and the speed regulation is made with a flow restrictor on the exhaust of the motor.

These restrictions little impact on the starting and stall torque because at zero speed, the air flow is minimal thanks to the small space around the rotors (see technical descrition).

ferry PRODUITS
3, Allée des Grands Paquis - BP 60102 - F-54183 HEILLECOURT CEDEX
Tel : +33 (0)3 83 35 22 97 - Fax : +33 (0)3 83 32 47 73

The diagram below schematizes for the same motor with different flow restrictions, two examples of modification on the torque curve.

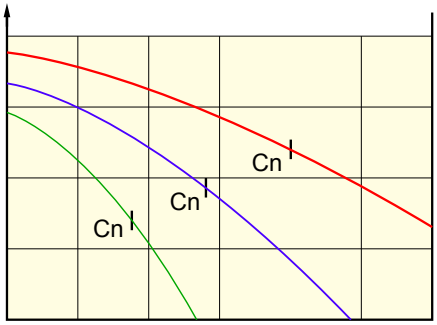

Under normal working conditions, under 15% of the speed at maximum power, higher reduction ratio is preferred.

Accelerations

To obtain the desired acceleration, the motor torque must be at least equal to the resistance torque, added to the torque necessary to overcome inertia. This torque is calculated as follow:

$$\frac{\text{Inertia (m}^2\text{kg)} \times \pi \times \text{Speed (r.p.m)}}{30 \times \text{Acceleration time (Sec)}} = \text{Torque (Nm)}$$

To take account the decrease of motor torque with speed, you can for a good approximation, consider torque at 2/3 of the final speed.
For a more precise result, you can calculate using different speed specifications.

Our motors are able of high accelerations with a small opposing torque.

Some advises for installation and operation

- **Attachment:** the motors are supplied with standard flange whose support side is in the same plane as the shaft shoulder. A bracket with standard height and fixing holes is available instead of the flange. The motors NF100, NF114, NF116, NF11414, NF11416, NF11616, NF200, NF224, NF226, NF22424, NF2242424C, NF280, NF284, NF286, NF28424 can be set by a collar bored in J7 or J8.

- **Coupling:** It is advised to couple the motor to the receiving shaft with an elastic coupling, ensuring that the shafts are heatedly aligned to avoid parasite reactions. One must make sure that the motor shaft is not full lock against the receiver shaft.

- **Shaft adjustment:** Bore in H7 or G6 (if possible prefer G6).

- **Shaft loads:** You will find at the end of this catalogue a table giving the accepted loads on the shaft, simple or combinatory loads, as well as instructions for connection, pneumatic installation, and example remote control diagrams.

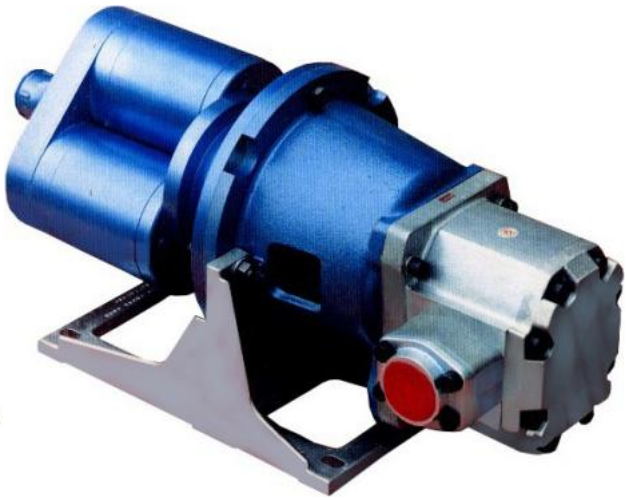

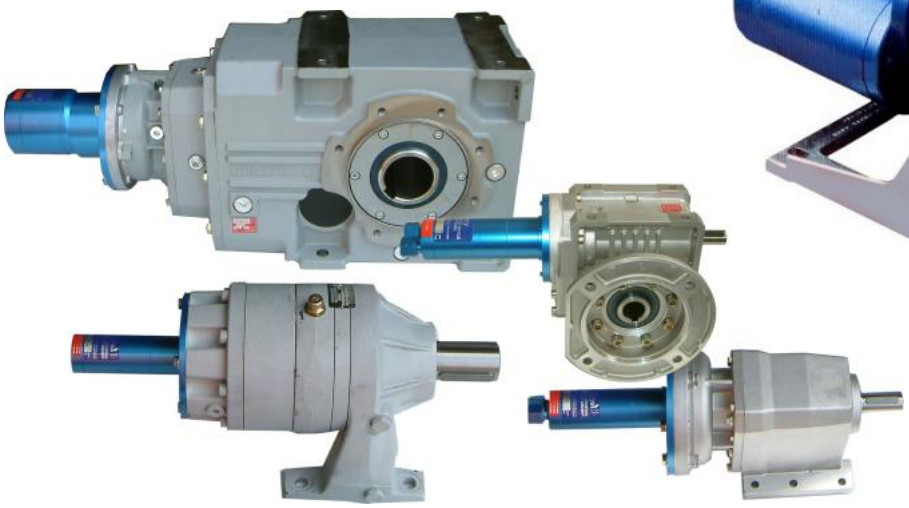

Nominal power

Power of a correct installation with losses at full flow doesn't exceed 10 to 12 %. The differential pressure that products the torque is equal to the effective inlet pressure less the counter-pressure at the exhaust due to the silencer (muffler) and to the possible distributor.

At top right of each technical sheet, the maximum power and the corresponding speed is noted. In the 2nd column from the right, the motor power is indicated at a speed little above half the speed at max power.
This power at about half speed remains 3/4 of the maximal power because of the special shape of the power curve of our motors. (Elevated torque and power at low speed).

This average running speed gives an optimum efficiency, one of the best that can be obtained for air motors in general.

Nominal speed

Some other air motors are characterized by their constructors by the free speed. This is not of great significance because the power and the torque are both reduced to zero.
For our motors, the maximum free speed is more than double of the nominal torque because frictions due to centrifugal force don't hinder the rotation of the motor.
The nominal speed we specify is well and truly the speed at the indicated power.

Useful speed

Range of speed variation obtained with air normally dry, filtered and lubricated (our motors can run without major problem at double of the speed at maximum power).

Optimal speeds

Range of speed variation in which the motor shows all its qualities of flexibility and efficiency.

Stability of speed

With a constant opposing torque and constant air pressure, the speed of our motors is remarkably stable: approx. 0.5% in the optimal speed range.

Starting torque

The starting torque shown is reliable. It's measured with a low angular clearance. This starting torque is almost double as of some other air motors.

The stalling torque, by progressive deceleration, is 3% higher than the starting torque. This similarity between the starting and the stalling torque gives our motors some unique possibilities.

Consumption

The consumption can vary slightly according to condition of use, but doesn't highly increase after long use of the motor.
$N.m^3=m^3$ of expanded air.
The specific consumption (by kW consumed) is one of the lowest for an air motor especially in the optimal speeds range.

Example of curve reading

To find a motor able to provide 3.5 Nm at 3000 rpm with 6 bars maximum available, and 5.5 Nm at 1500 rpm, that is respectively 1.1 kW and 0.86 kW.

(1 kW = 10 Nm at 955 rpm)

The motor type NF300 provides these conditions at 3000 rpm at 5 bars and a little fewer than 6 bars at 1500 rpm.

The specific consumption at 1500 rpm is about 1.1 N.m3 per kW that is very good for an air motor with this power.

At 6 bars, the starting torque of this motor will be almost double the useful torque at 3000 rpm and if the resistant torque increased to 6 Nm, the motor would slow to about 1000 rpm without stalling.

This explains why, with their high power at low speed, our motors can often replace other types of air motors with almost double power.

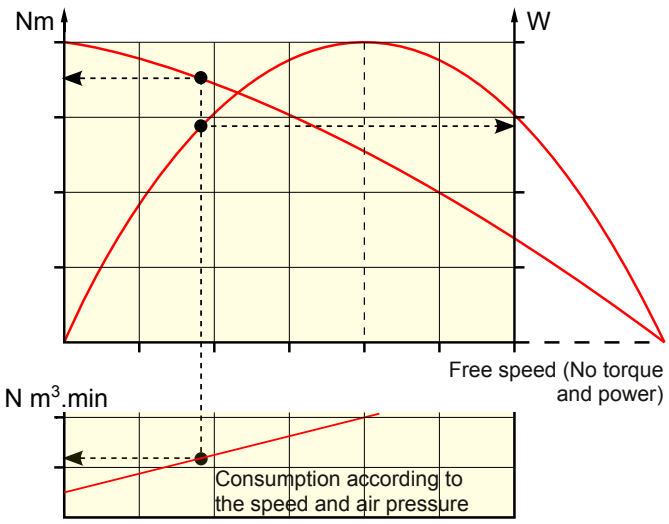

ferry PRODUITS
3, Allée des Grands Paquis - BP 60102 - F-54183 HEILLECOURT CEDEX
Tel : +33 (0)3 83 35 22 97 - Fax : +33 (0)3 83 32 47 73

DOUBLE ROTOR AIR MOTORS

Approx weight	Starting torque	Nominal torque	Useful speeds 0 to 10200 r.p.m / Optimal speeds 1570 to 7300 r.p.m	Type	*0,17 kW* at *4500 r.p.m*	**0,22 kW** at **7850 r.p.m**
0,45 kg	**0,55 Nm**	0,3 Nm		**NF 100**		

	Minimum valve flow	Internal connection Ø	Internal pipe Ø
Average perform under 6 bar pressure			
Inlet	500 N l.min.	8 mm	6 mm
Exhaust	500 N l.min.	10 mm	8 mm

	A	B	C	D	E
F46	46	52	32	2	M4
F100	100	120	80	2,5	Ø9
E	Square mounting				

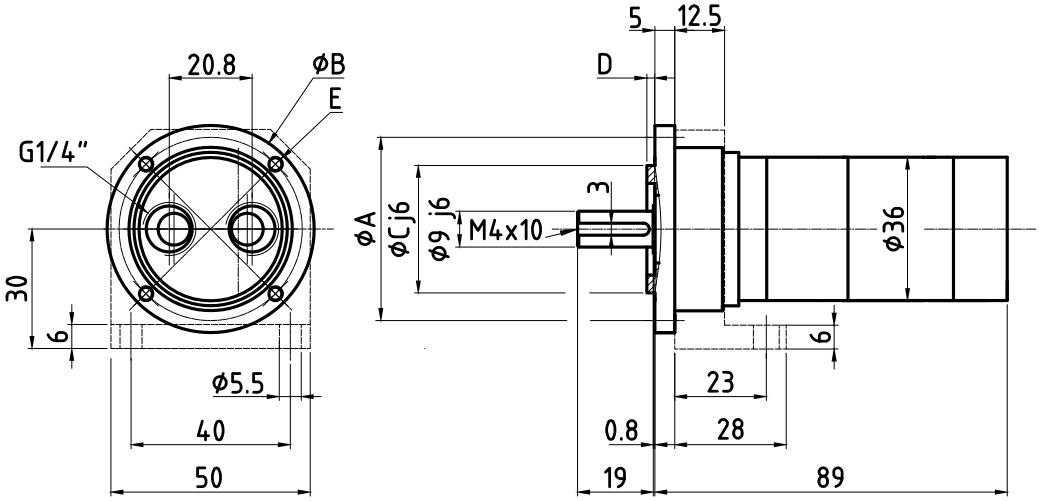

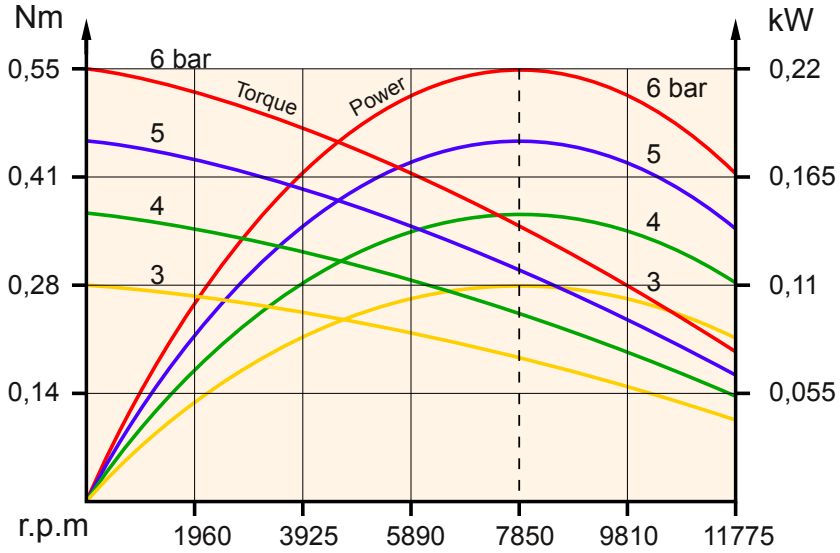

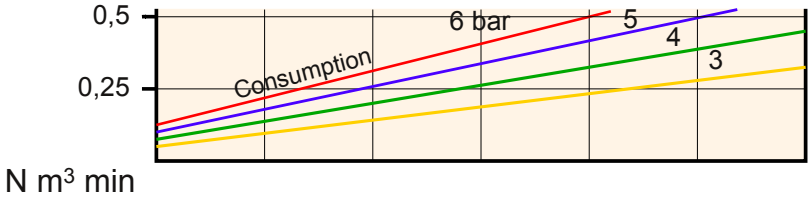

ferry PRODUITS
3, Allée des Grands Paquis - BP 60102 - F-54183 HEILLECOURT CEDEX
Tel : +33 (0)3 83 35 22 97 - Fax : +33 (0)3 83 32 47 73

DOUBLE ROTOR AIR MOTORS

Approx weight	Starting torque	Nominal torque	Useful speeds	Type		
0,75 kg	2,1 Nm	1,1 Nm	0 to 2620 r.p.m Optimal speeds 400 to 1880 r.p.m	NF 114	*0,17 kW* at *1160 r.p.m*	**0,22 kW** at **2020 r.p.m**
0,75 kg	3 Nm	1,5 Nm	0 to 1870 r.p.m Optimal speeds 290 to 1340 r.p.m	NF 116	*0,17 kW* at *825 r.p.m*	**0,22 kW** at **1440 r.p.m**

Average perform under 6 bar pressure

	Minimum valve flow	Internal connection Ø	Internal pipe Ø
Inlet	500 N l.min.	8 mm	6 mm
Exhaust	500 N l.min.	10 mm	8 mm

	A	B	C	D	E
F46	46	52	32	2	M4
F115	115	140	90	3	Ø9,5
E	Square mounting				

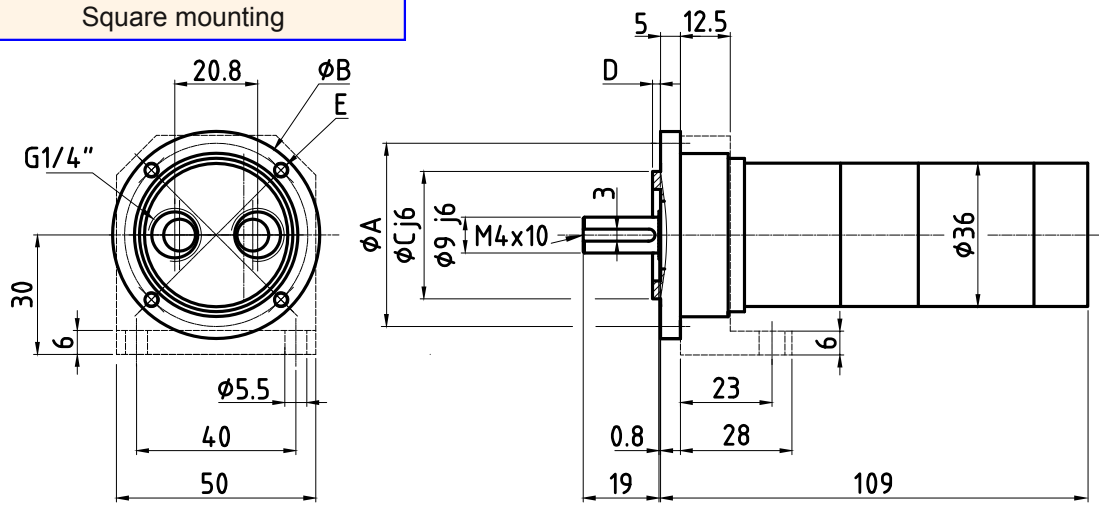

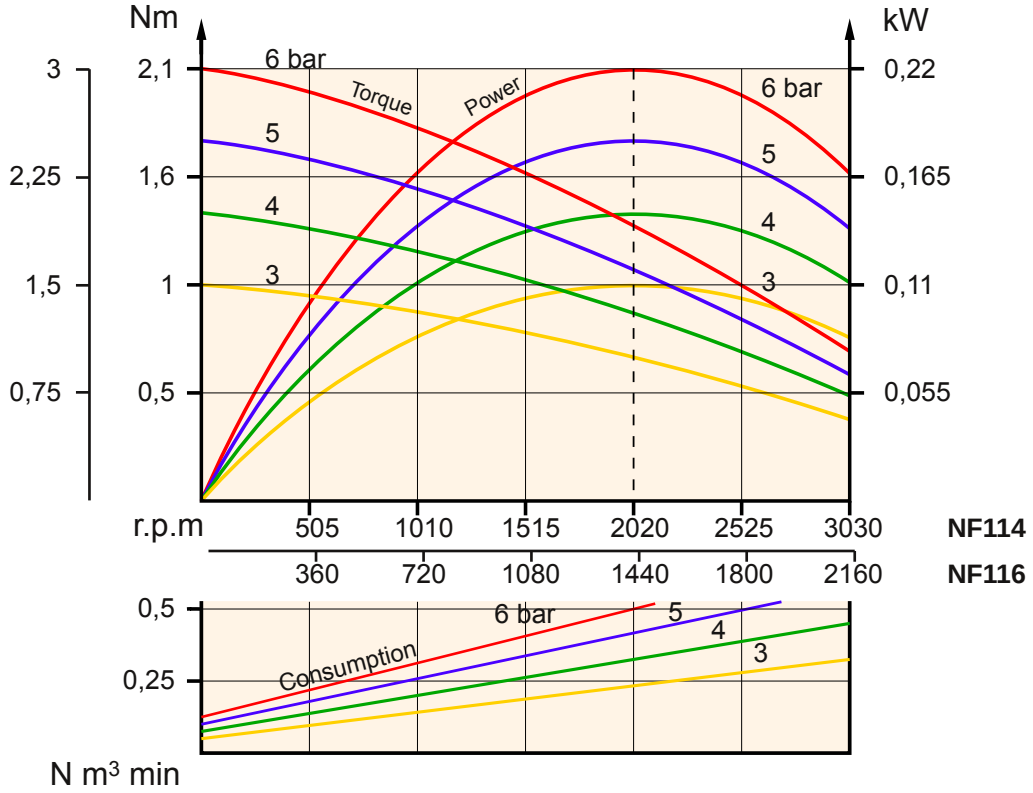

ferry PRODUITS
3, Allée des Grands Paquis - BP 60102 - F-54183 HEILLECOURT CEDEX
Tel : +33 (0)3 83 35 22 97 - Fax : +33 (0)3 83 32 47 73

DOUBLE ROTOR AIR MOTORS

Approx weight	Starting torque	Nominal torque	Useful speeds	Type		
0,9 kg	8,3 Nm	4 Nm	0 to 675 r.p.m Optimal speeds 105 to 485 r.p.m	NF 114 14	*0,17 kW* at *300 r.p.m*	**0,22 kW** at **520 r.p.m**
0,9 kg	11,6 Nm	5,7 Nm	0 to 480 r.p.m Optimal speeds 75 to 345 r.p.m	NF 114 16	*0,17 kW* at *210 r.p.m*	**0,22 kW** at **370 r.p.m**

Average perform under 6 bar pressure

	Minimum valve flow	Internal connection Ø	Internal pipe Ø
Inlet	500 N l.min.	8 mm	6 mm
Exhaust	500 N l.min.	10 mm	8 mm

	A	B	C	D	E
F46	46	52	32	2	M4
F115	115	140	90	3	Ø9,5
E	Square mounting				

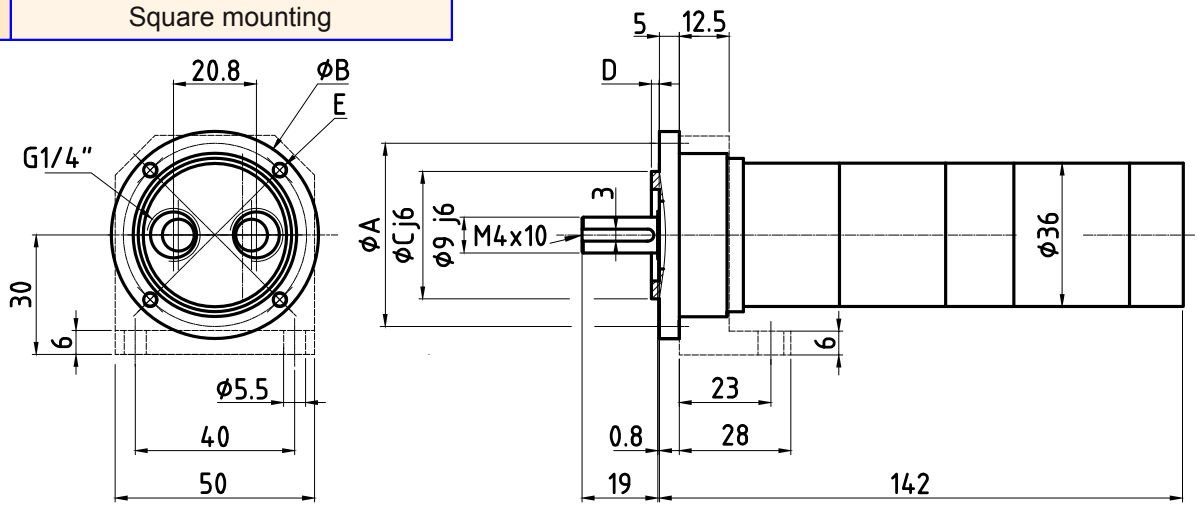

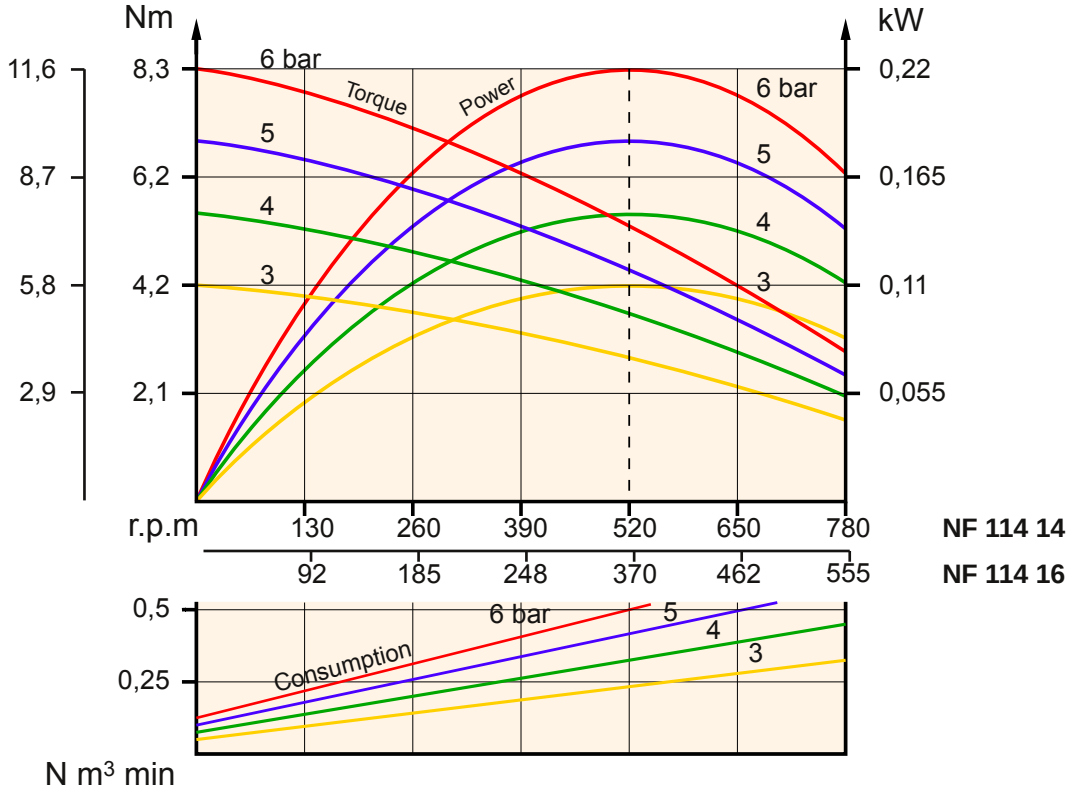

ferry PRODUITS
3, Allée des Grands Paquis - BP 60102 - F-54183 HEILLECOURT CEDEX
Tel : +33 (0)3 83 35 22 97 - Fax : +33 (0)3 83 32 47 73

DOUBLE ROTOR AIR MOTORS

Approx weight	Starting torque	Nominal torque	Useful speeds 0 to 340 r.p.m / Optimal speeds 55 to 245 r.p.m	Type	*0,17 kW* at *150 r.p.m*	**0,22 kW** at **265 r.p.m**
0,9 kg	**16,4 Nm**	7,9 Nm		**NF 116 16**		

Average perform under 6 bar pressure			
	Minimum valve flow	**Internal connection Ø**	**Internal pipe Ø**
Inlet	500 N l.min.	8 mm	6 mm
Exhaust	500 N l.min.	10 mm	8 mm

	A	B	C	D	E
F46	46	52	32	2	M4
F115	115	140	90	3	Ø9,5
E	Square mounting				

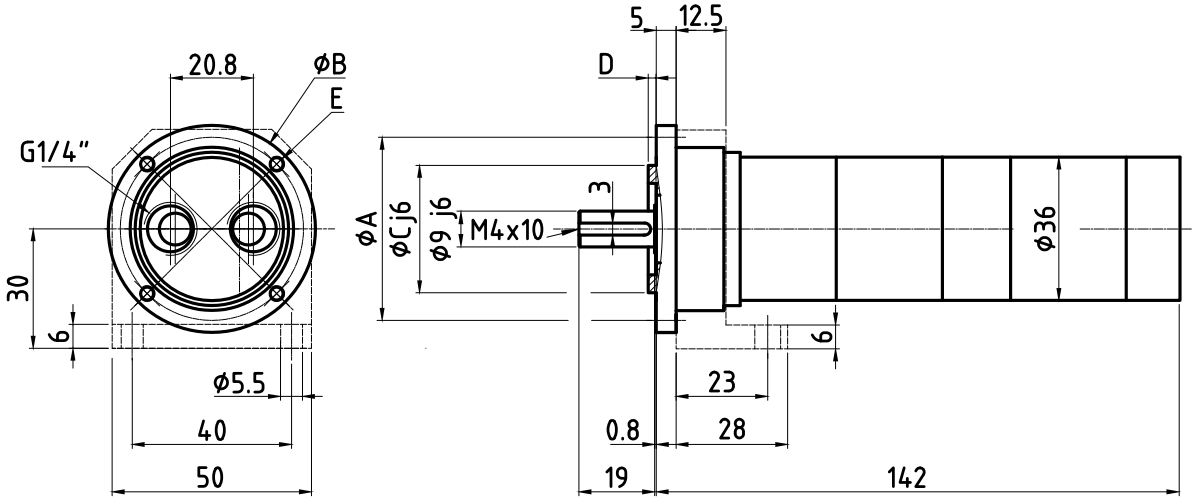

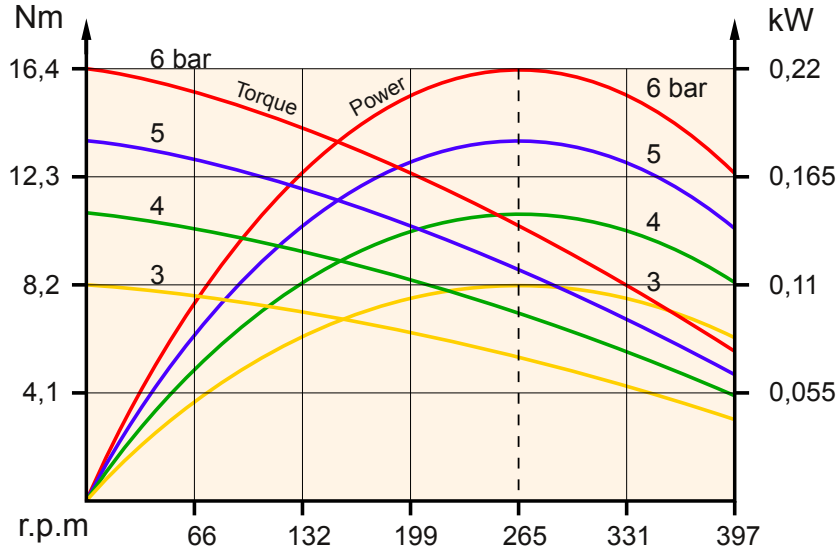

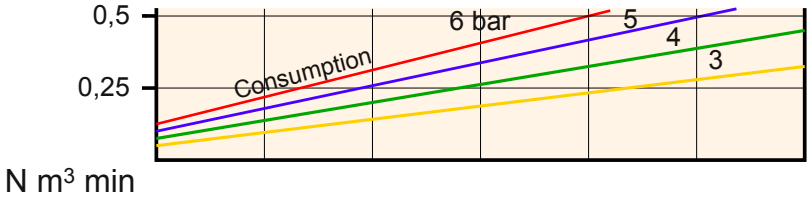

ferry PRODUITS
3, Allée des Grands Paquis - BP 60102 - F-54183 HEILLECOURT CEDEX
Tel : +33 (0)3 83 35 22 97 - Fax : +33 (0)3 83 32 47 73

DOUBLE ROTOR AIR MOTORS

Approx weight	Starting torque	Nominal torque	Useful speeds 0 to 27000 r.p.m / Optimal speeds 4000 to 18000 r.p.m	Type	*0,42 kW* at *11000 r.p.m*	**0,55 kW** at **18000 r.p.m**
1 kg	**0,43 Nm**	0,3 Nm		**SF 200 B**		

Average perform under 6 bar pressure

	Minimum valve flow	Internal connection Ø	Internal pipe Ø
Inlet	1000 N l.min.	8 mm	9 mm
Exhaust	1000 N l.min.	10 mm	11 mm

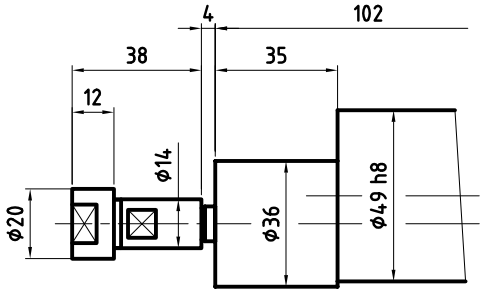

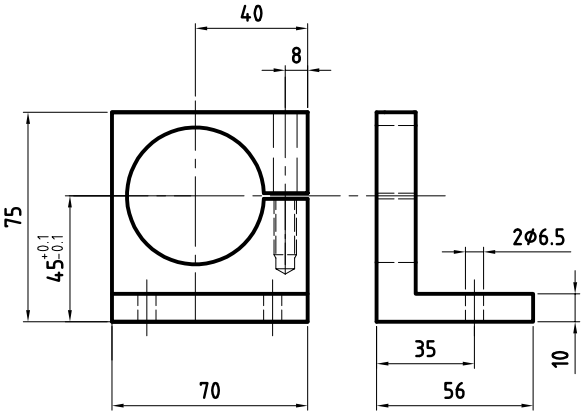

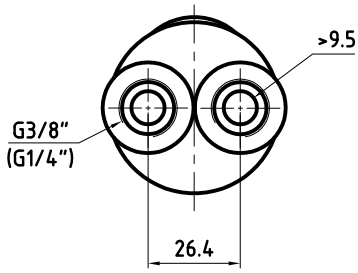

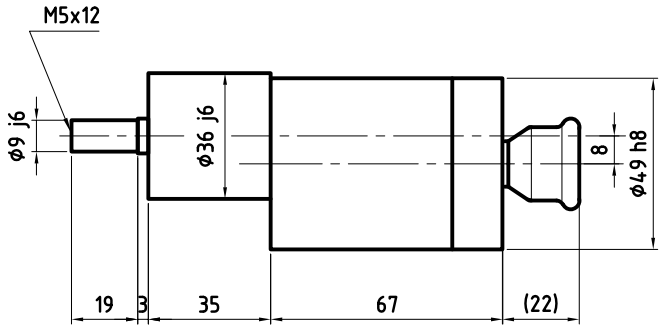

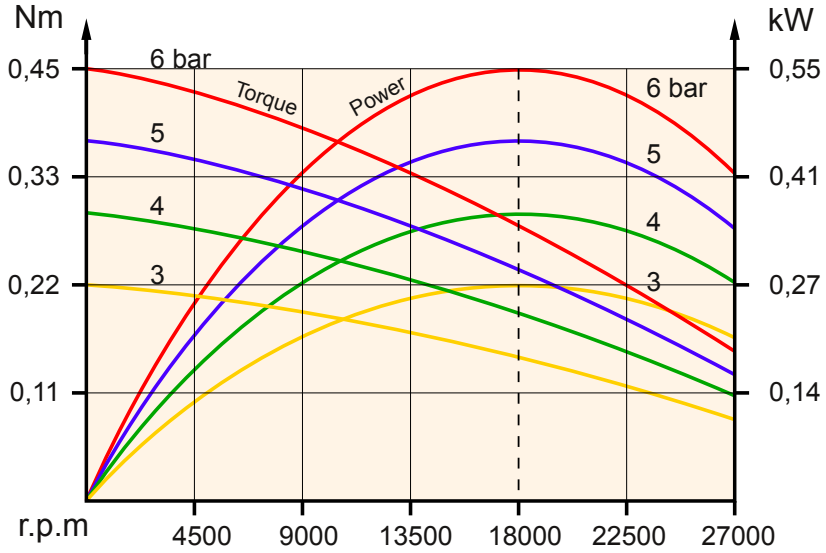

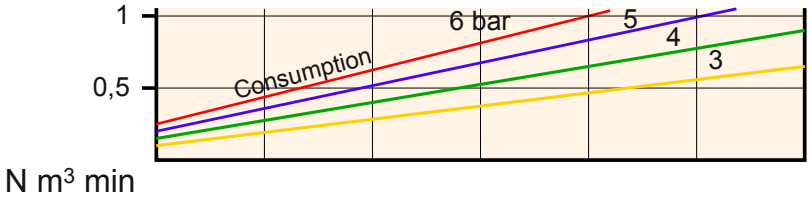

ferry PRODUITS
3, Allée des Grands Paquis - BP 60102 - F-54183 HEILLECOURT CEDEX
Tel : +33 (0)3 83 35 22 97 - Fax : +33 (0)3 83 32 47 73

DOUBLE ROTOR AIR MOTORS

Approx weight	Starting torque	Nominal torque	Useful speeds 0 to 6400 r.p.m / Optimal speeds 850 to 4000 r.p.m	Type	*0,42 kW* at *2450 r.p.m*	**0,55 kW** at **4300 r.p.m**
1,1 kg	**1,9 Nm**	1,2 Nm		**NF 200**		

Average perform under 6 bar pressure

	Minimum valve flow	Internal connection Ø	Internal pipe Ø
Inlet	1000 N l.min.	8 mm	9 mm
Exhaust	1000 N l.min.	10 mm	11 mm

	A	B	C	D	E
F65	65	80	50	2,5	M5
F115	115	140	95	3	Ø9,5
E	Square mounting				

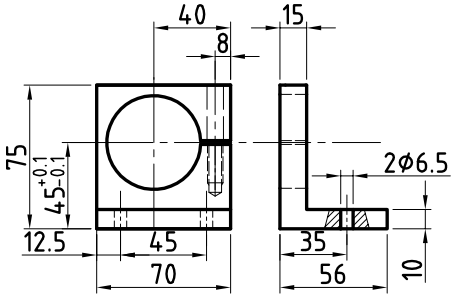

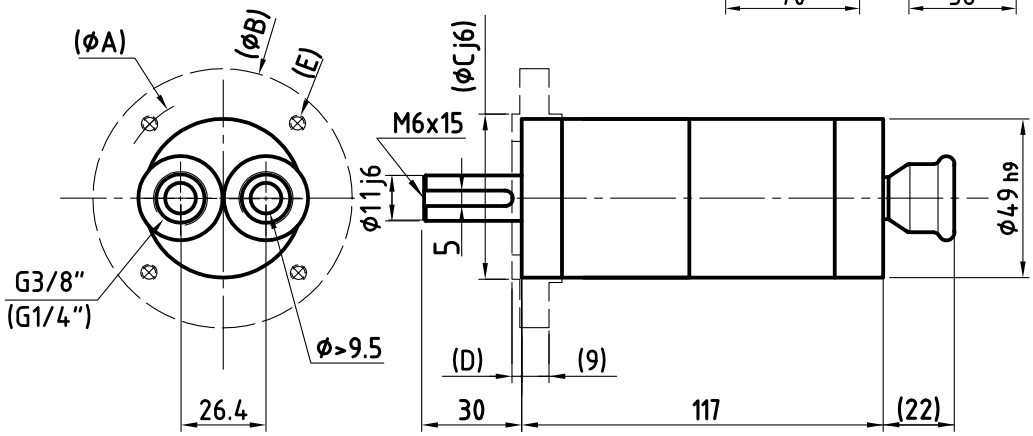

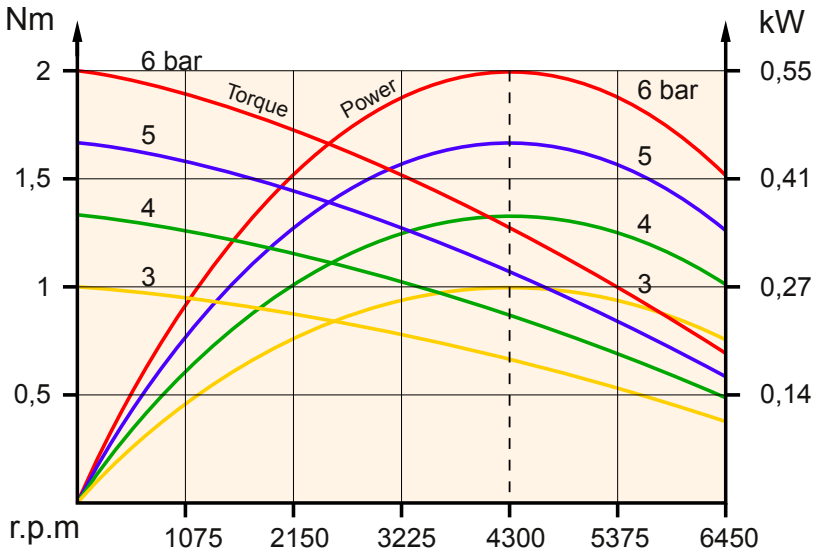

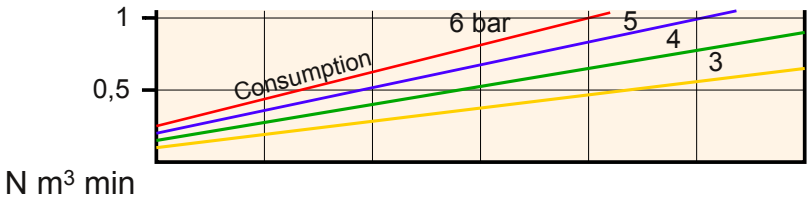

ferry PRODUITS
3, Allée des Grands Paquis - BP 60102 - F-54183 HEILLECOURT CEDEX
Tel : +33 (0)3 83 35 22 97 - Fax : +33 (0)3 83 32 47 73

DOUBLE ROTOR AIR MOTORS

Approx weight	Starting torque	Nominal torque	Useful speeds	Type		
1,4 kg	7,8 Nm	5 Nm	0 to 1450 r.p.m **Optimal speeds** 200 to 950 r.p.m	**NF 224**	*0,4 kW* at *580 r.p.m*	**0,53 kW** at **1020 r.p.m**
Approx weight	**Starting torque**	**Nominal torque**	**Useful speeds**	**Type**		
1,4 kg	11,7 Nm	7,7 Nm	0 to 950 r.p.m **Optimal speeds** 130 to 600 r.p.m	**NF 226**	*0,4 kW* at *380 r.p.m*	**0,53 kW** at **660 r.p.m**

Average perform under 6 bar pressure

	Minimum valve flow	Internal connection Ø	Internal pipe Ø
Inlet	1000 N l.min.	8 mm	9 mm
Exhaust	1000 N l.min.	10 mm	11 mm

	A	B	C	D	E
F65	65	80	50	2,5	M5
F130	130	160	110	3,5	Ø9,5
E	Square mounting				

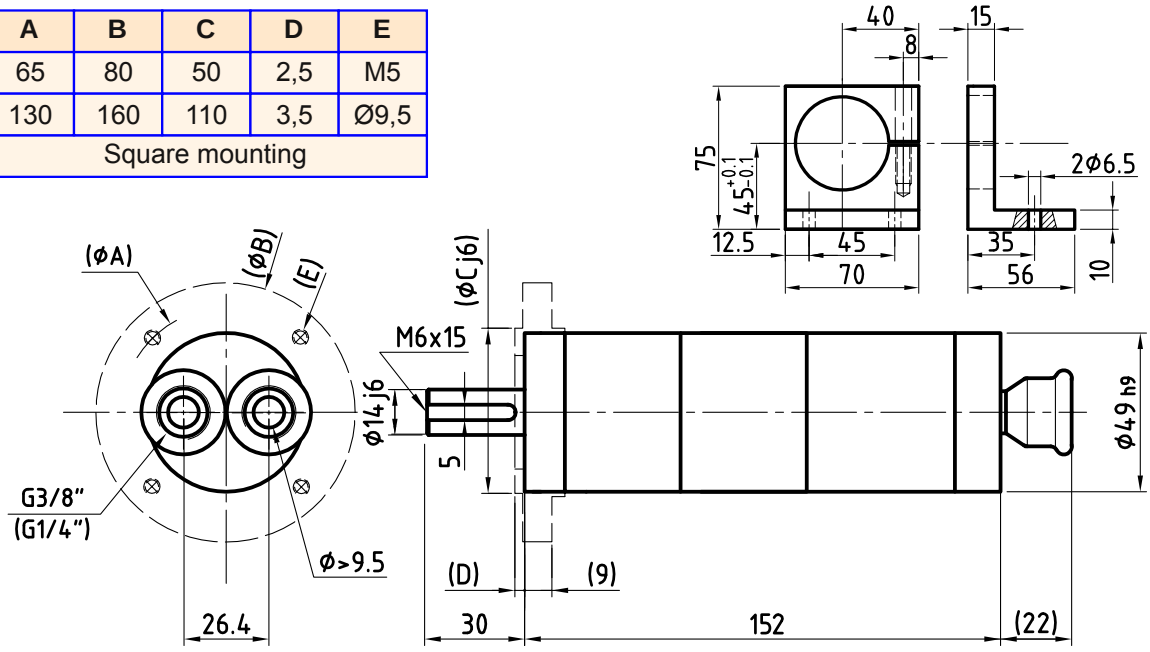

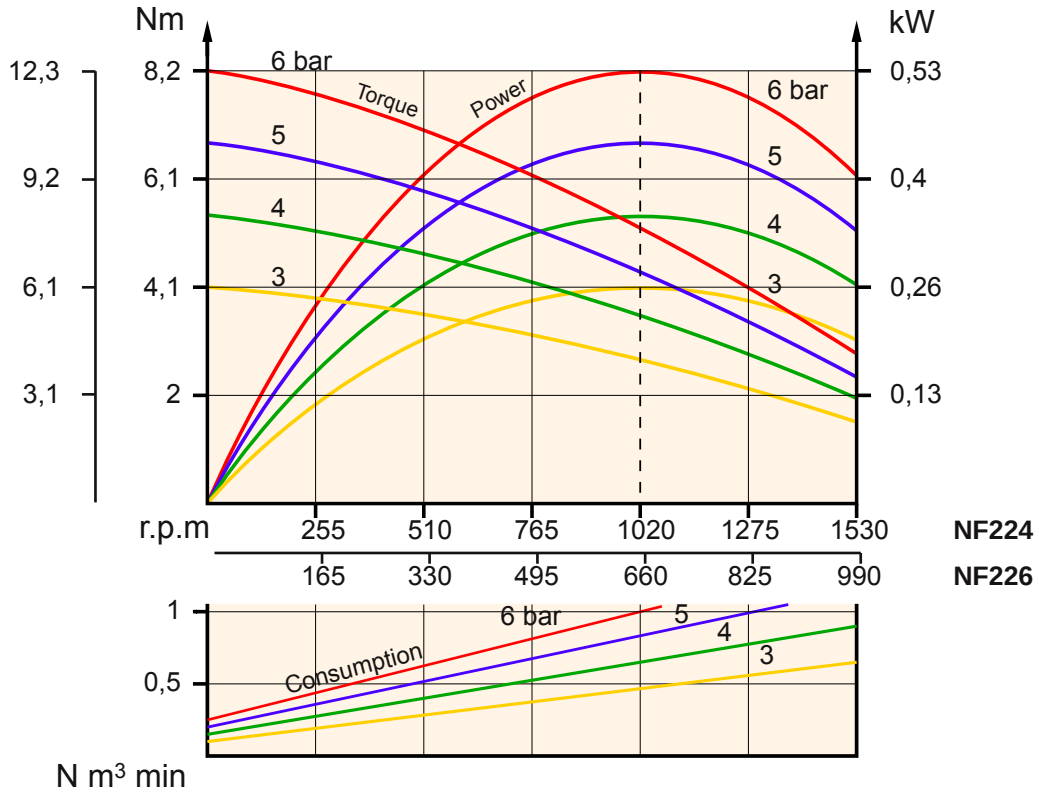

ferry PRODUITS
3, Allée des Grands Paquis - BP 60102 - F-54183 HEILLECOURT CEDEX
Tel : +33 (0)3 83 35 22 97 - Fax : +33 (0)3 83 32 47 73

DOUBLE ROTOR AIR MOTORS

Approx weight	Starting torque	Nominal torque	Useful speeds 0 to 400 r.p.m / Optimal speeds 50 to 210 r.p.m	Type	*0,4 kW* at *140 r.p.m*	**0,53 kW** at **245 r.p.m**
1,8 kg	**31,5 Nm**	20,7 Nm		**NF 224 24**		

Average perform under 6 bar pressure

	Minimum valve flow	Internal connection Ø	Internal pipe Ø
Inlet	1000 N l.min.	8 mm	9 mm
Exhaust	1000 N l.min.	10 mm	11 mm

	A	B	C	D	E
F65	65	80	50	2,5	M5
F130	130	160	110	3,5	Ø9,5
E	Square mounting				

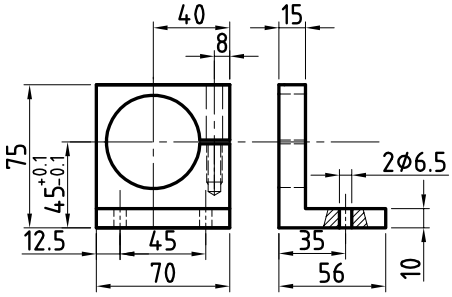

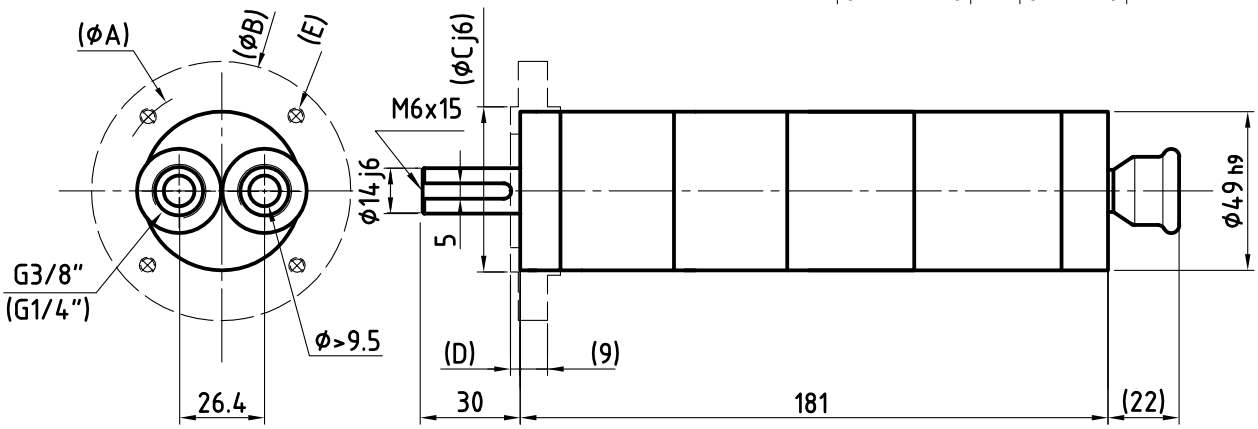

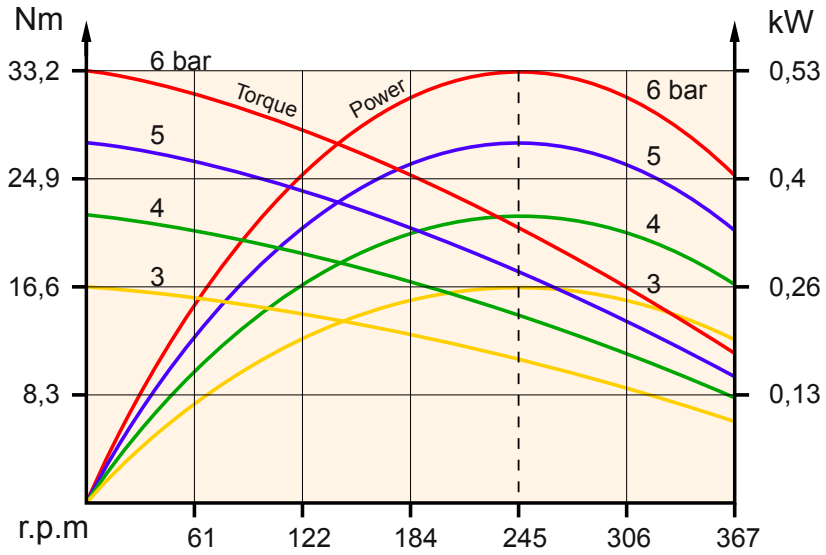

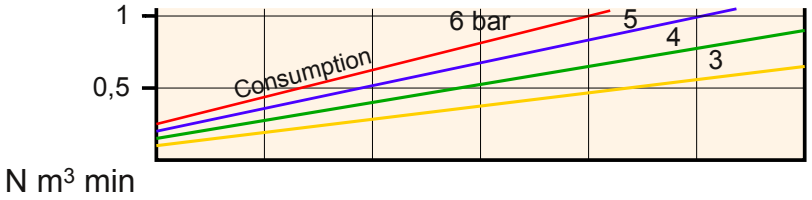

ferry PRODUITS
3, Allée des Grands Paquis - BP 60102 - F-54183 HEILLECOURT CEDEX
Tel : +33 (0)3 83 35 22 97 - Fax : +33 (0)3 83 32 47 73

DOUBLE ROTOR AIR MOTORS

Approx weight	Starting torque	Nominal torque	Useful speeds 0 to 95 r.p.m / Optimal speeds 12 to 50 r.p.m	Type	*0,17 kW* at *36 r.p.m*	**0,21 kW** at **60 r.p.m**
2,2 kg	**44,5 Nm**	33,4 Nm		**NF 2242424C**		

	Minimum valve flow	Internal connection Ø	Internal pipe Ø
Average perform under 6 bar pressure			
Inlet	1000 N l.min.	8 mm	9 mm
Exhaust	1000 N l.min.	10 mm	11 mm

	A	B	C	D	E
F65	65	80	50	2,5	M5
F130	130	160	110	3,5	Ø9,5
E	Square mounting				

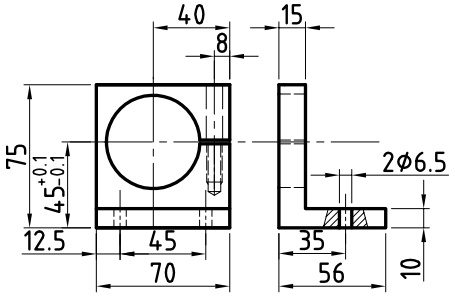

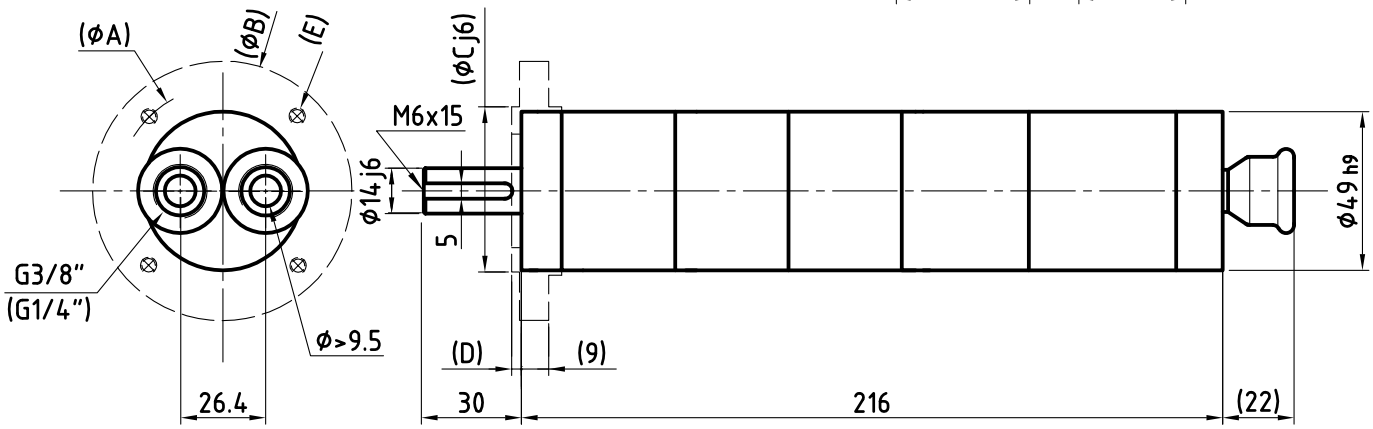

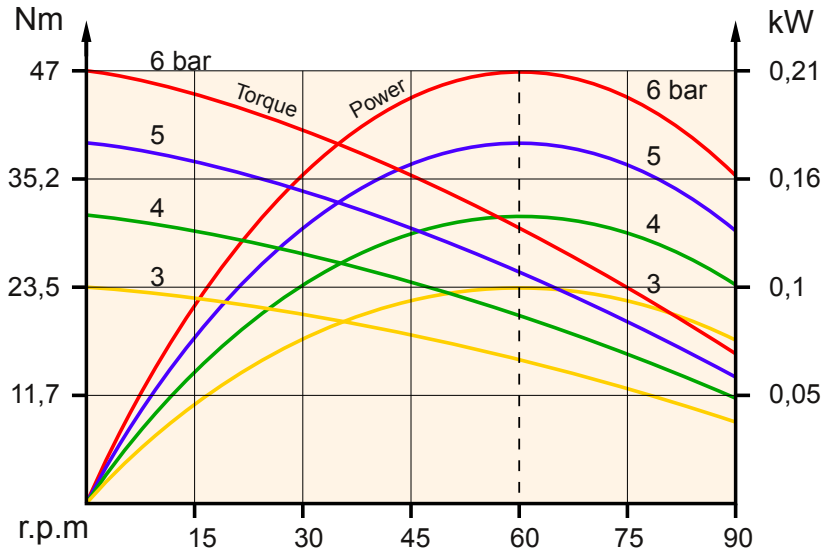

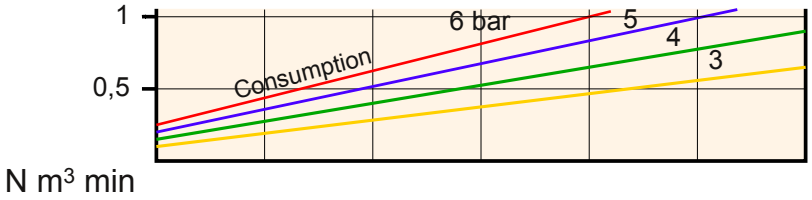

ferry PRODUITS
3, Allée des Grands Paquis - BP 60102 - F-54183 HEILLECOURT CEDEX
Tel : +33 (0)3 83 35 22 97 - Fax : +33 (0)3 83 32 47 73

DOUBLE ROTOR AIR MOTORS

Approx weight	Starting torque	Nominal torque	Useful speeds / Optimal speeds	Type		
3,6 kg	54 Nm	36,1 Nm	Useful speeds 0 to 200 r.p.m Optimal speeds 30 to 130 r.p.m	NF 226 34	*0,4 kW* at *80 r.p.m*	**0,53 kW** at **140 r.p.m**
3,7 kg	88 Nm	59,5 Nm	Useful speeds 0 to 110 r.p.m Optimal speeds 18 to 80 r.p.m	NF 226 37	*0,4 kW* at *50 r.p.m*	**0,53 kW** at **85 r.p.m**

Average perform under 6 bar pressure

	Minimum valve flow	Internal connection Ø	Internal pipe Ø
Inlet	1000 N l.min.	8 mm	9 mm
Exhaust	1000 N l.min.	10 mm	11 mm

	A	B	C	D	E
F75	75	90	60	2,5	M5
F165	165	200	130	3,5	Ø11,5
E	Square mounting				

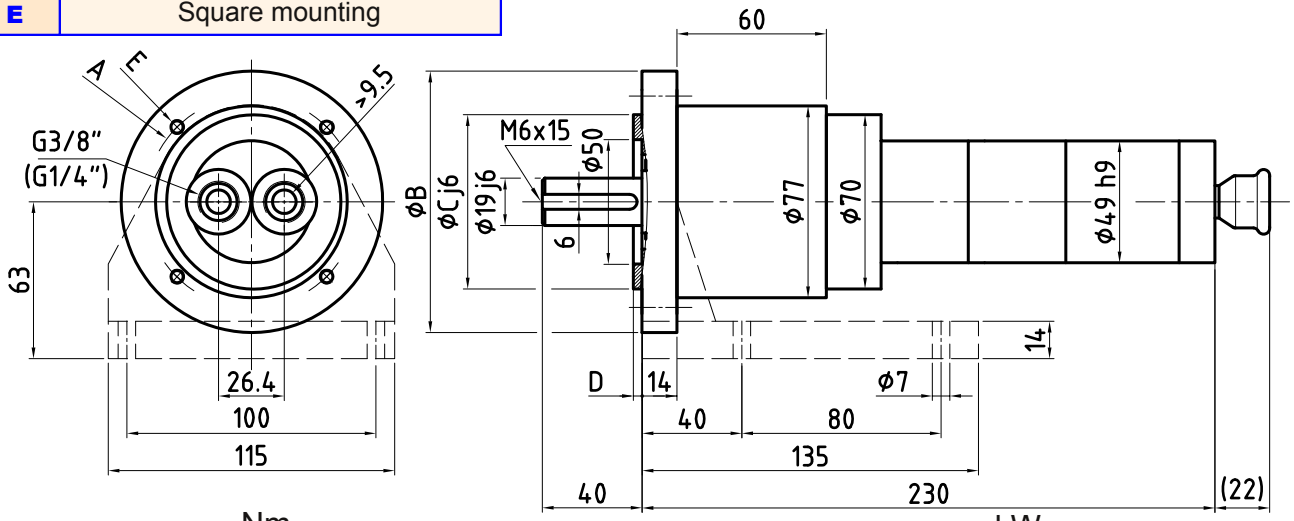

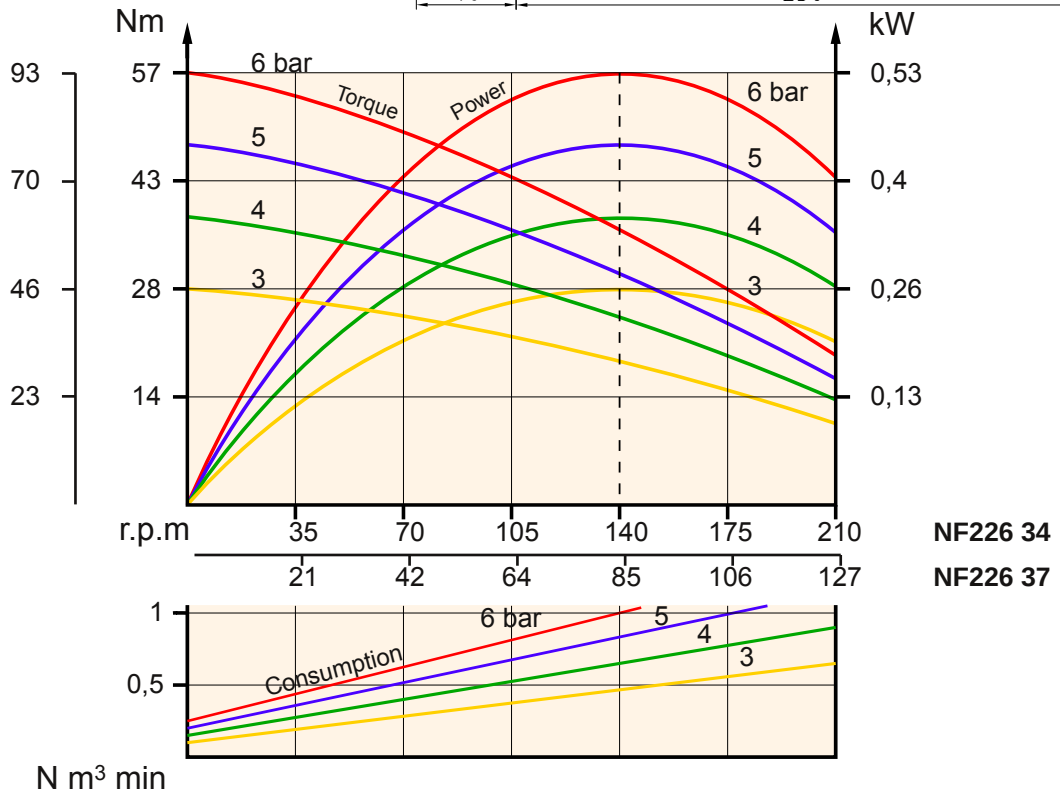

ferry PRODUITS
3, Allée des Grands Paquis - BP 60102 - F-54183 HEILLECOURT CEDEX
Tel : +33 (0)3 83 35 22 97 - Fax : +33 (0)3 83 32 47 73

DOUBLE ROTOR AIR MOTORS

Approx weight	Starting torque	Nominal torque	Useful speeds 0 to 39 r.p.m / Optimal speeds 5 to 24 r.p.m	Type	*0,26 kW* at *15 r.p.m*	**0,35 kW** at **26 r.p.m**
5,6 kg	**198 Nm**	128 Nm		**NF 2263436**		

Average perform under 4 bar pressure

	Minimum valve flow	Internal connection Ø	Internal pipe Ø
Inlet	700 N l.min.	8 mm	9 mm
Exhaust	700 N l.min.	10 mm	11 mm

	A	B	C	D	E
F75	75	90	60	2,5	M5
F165	165	200	130	3,5	Ø11,5
E	Square mounting				

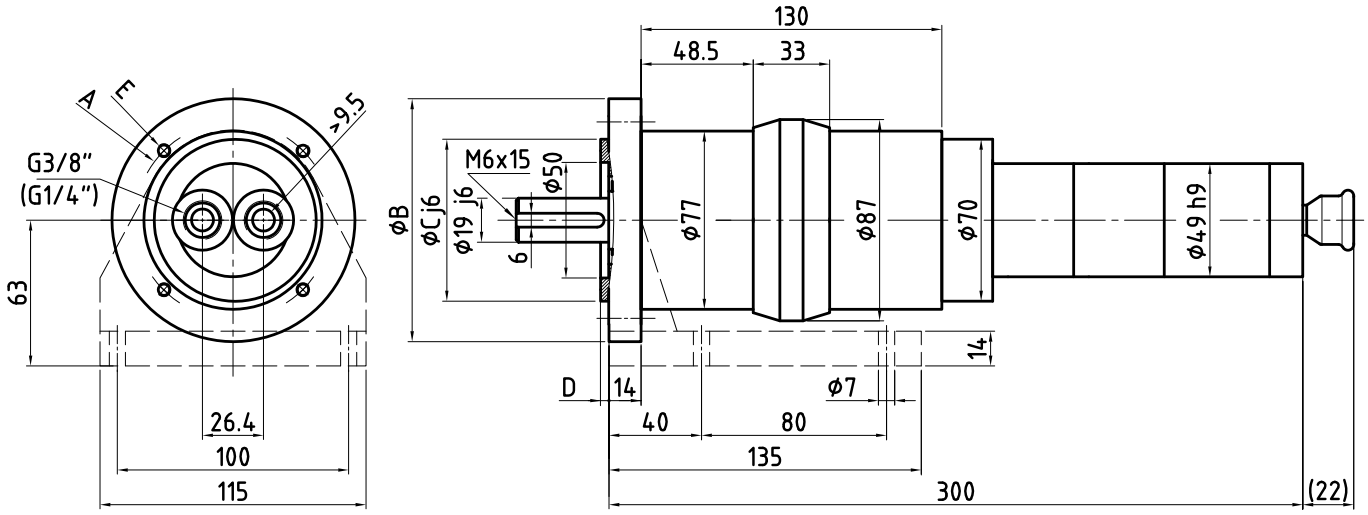

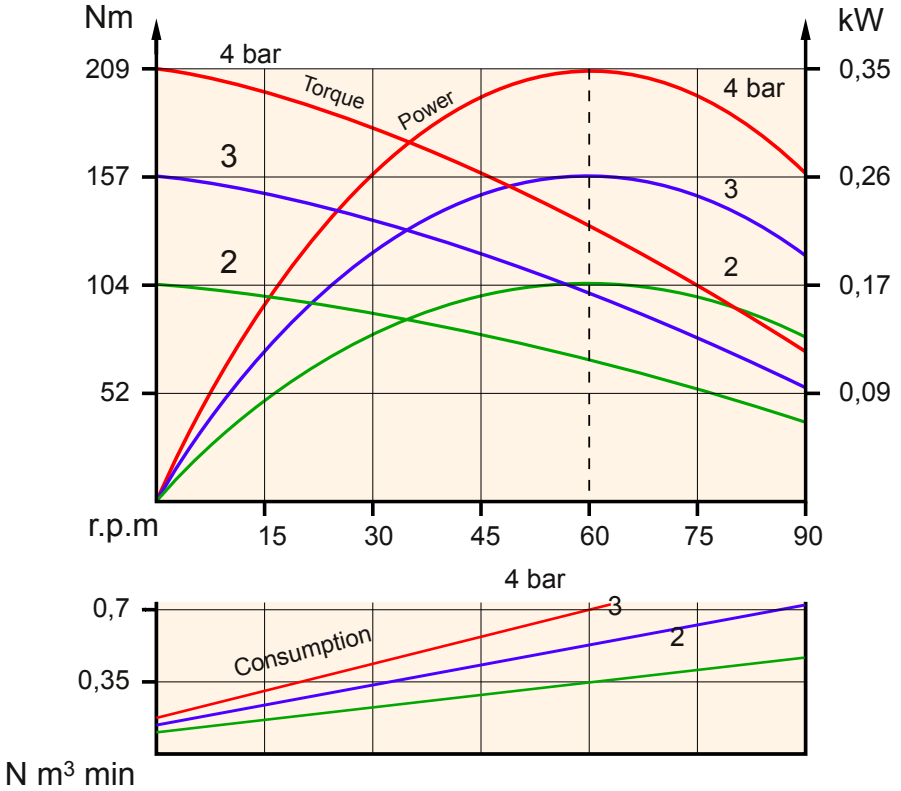

ferry PRODUITS

3, Allée des Grands Paquis - BP 60102 - F-54183 HEILLECOURT CEDEX
Tel : +33 (0)3 83 35 22 97 - Fax : +33 (0)3 83 32 47 73

DOUBLE ROTOR AIR MOTORS

Approx weight	Starting torque	Nominal torque	Useful speeds 0 to 6400 r.p.m / Optimal speeds 850 to 4000 r.p.m	Type	*0,62 kW* at *2450 r.p.m*	**0,8 kW** at **4300 r.p.m**
1,3 kg	**2,75 Nm**	1,8 Nm		**NF 280**		

Average perform under 6 bar pressure

	Minimum valve flow	Internal connection Ø	Internal pipe Ø
Inlet	1200 N l.min.	8 mm	9 mm
Exhaust	1200 N l.min.	10 mm	11 mm

	A	B	C	D	E
F65	65	80	50	2,5	M5
F115	115	140	95	3	Ø9,5
E	Square mounting				

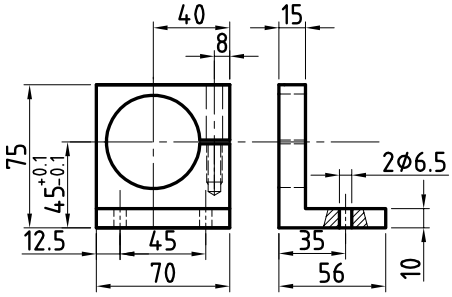

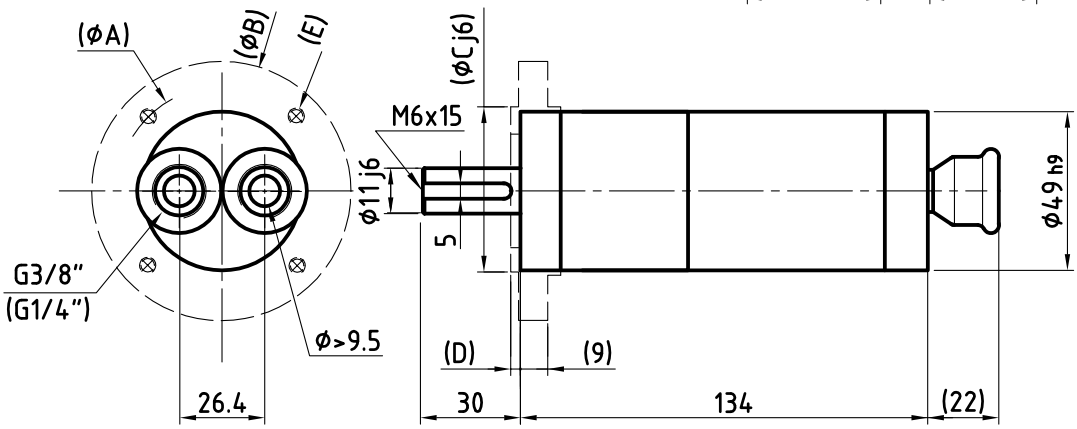

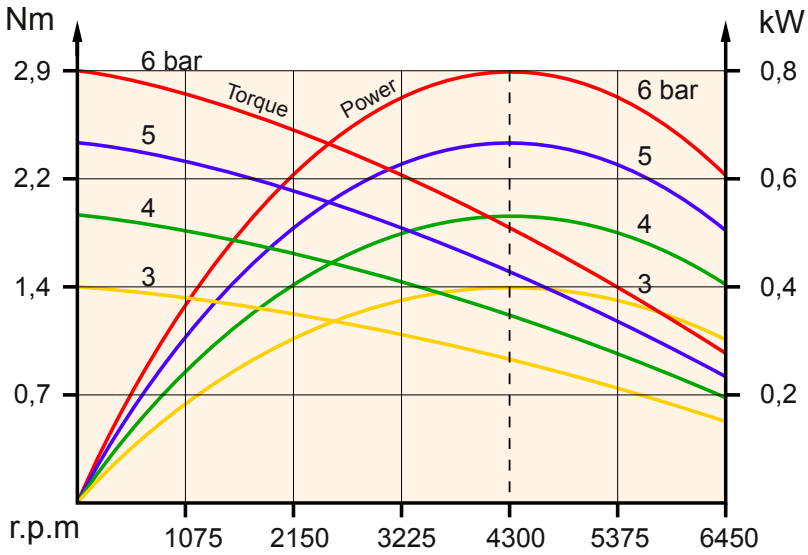

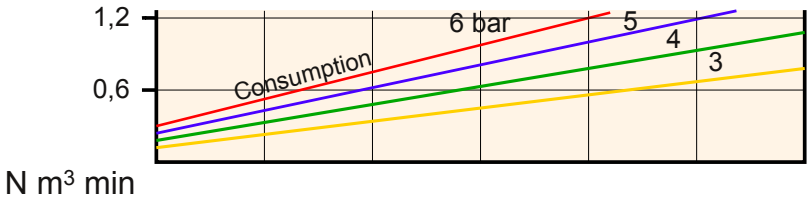

ferry PRODUITS
3, Allée des Grands Paquis - BP 60102 - F-54183 HEILLECOURT CEDEX
Tel : +33 (0)3 83 35 22 97 - Fax : +33 (0)3 83 32 47 73

DOUBLE ROTOR AIR MOTORS

Approx weight	Starting torque	Nominal torque	Useful speeds / Optimal speeds	Type		
1,6 kg	11,8 Nm	7,5 Nm	Useful speeds 0 to 1450 r.p.m Optimal speeds 200 to 950 r.p.m	**NF 284**	*0,62 kW* at *580 r.p.m*	**0,8 kW** at **1020 r.p.m**
1,6 kg	18 Nm	11,6 Nm	Useful speeds 0 to 950 r.p.m Optimal speeds 130 to 600 r.p.m	**NF 286**	*0,62 kW* at *380 r.p.m*	**0,8 kW** at **660 r.p.m**

Average perform under 6 bar pressure

	Minimum valve flow	Internal connection Ø	Internal pipe Ø
Inlet	1200 N l.min.	8 mm	9 mm
Exhaust	1200 N l.min.	10 mm	11 mm

	A	B	C	D	E
F65	65	80	50	2,5	M5
F130	130	160	110	3,5	Ø9,5
E	Square mounting				

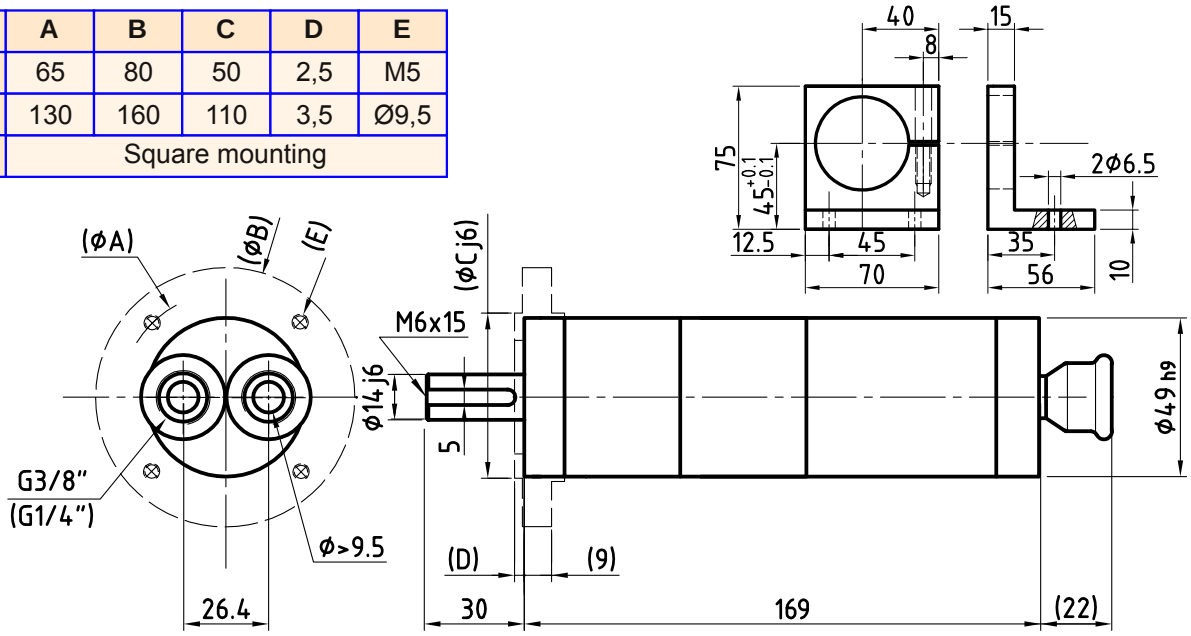

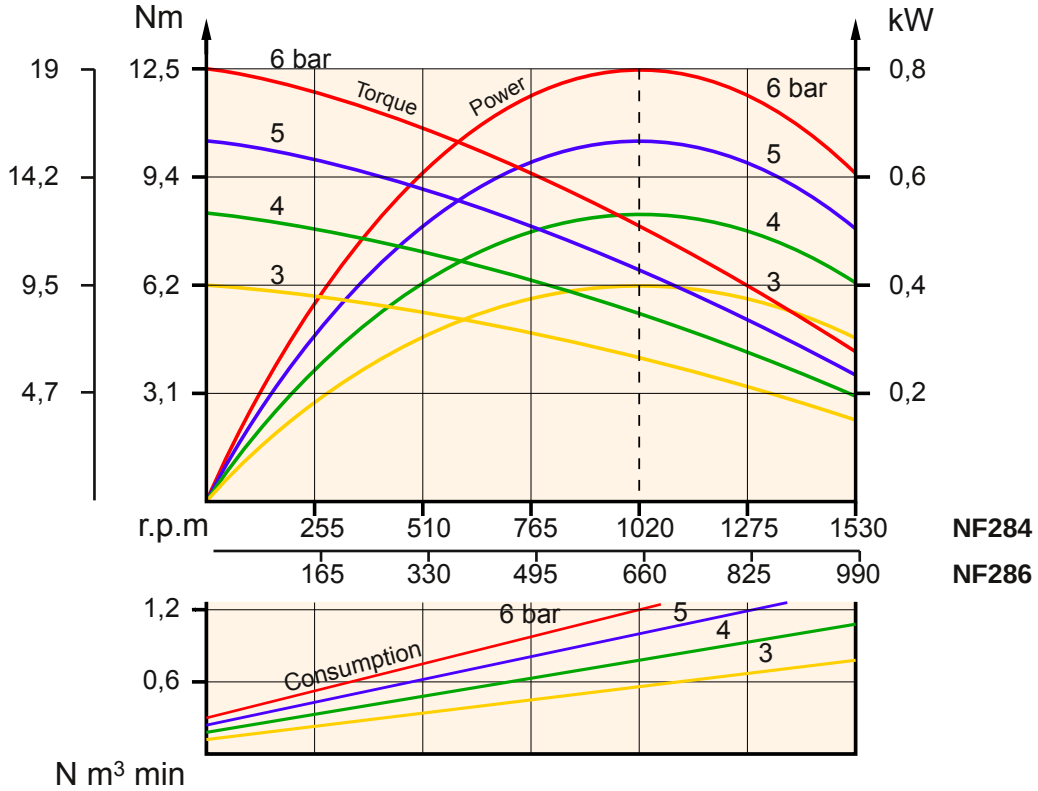

ferry PRODUITS
3, Allée des Grands Paquis - BP 60102 - F-54183 HEILLECOURT CEDEX
Tel : +33 (0)3 83 35 22 97 - Fax : +33 (0)3 83 32 47 73

DOUBLE ROTOR AIR MOTORS

Approx weight	Starting torque	Nominal torque	Useful speeds 0 to 400 r.p.m / Optimal speeds 50 to 210 r.p.m	Type	*0,62 kW* at *140 r.p.m*	**0,8 kW** at **245 r.p.m**
2 kg	**47 Nm**	31,2 Nm		**NF 284 24**		

Average perform under 6 bar pressure

	Minimum valve flow	Internal connection Ø	Internal pipe Ø
Inlet	1200 N l.min.	8 mm	9 mm
Exhaust	1200 N l.min.	10 mm	11 mm

	A	B	C	D	E
F65	65	80	50	2,5	M5
F130	130	160	110	3,5	Ø9,5
E	Square mounting				

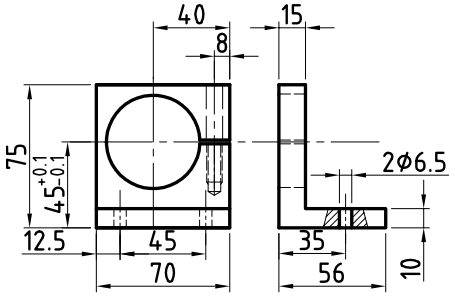

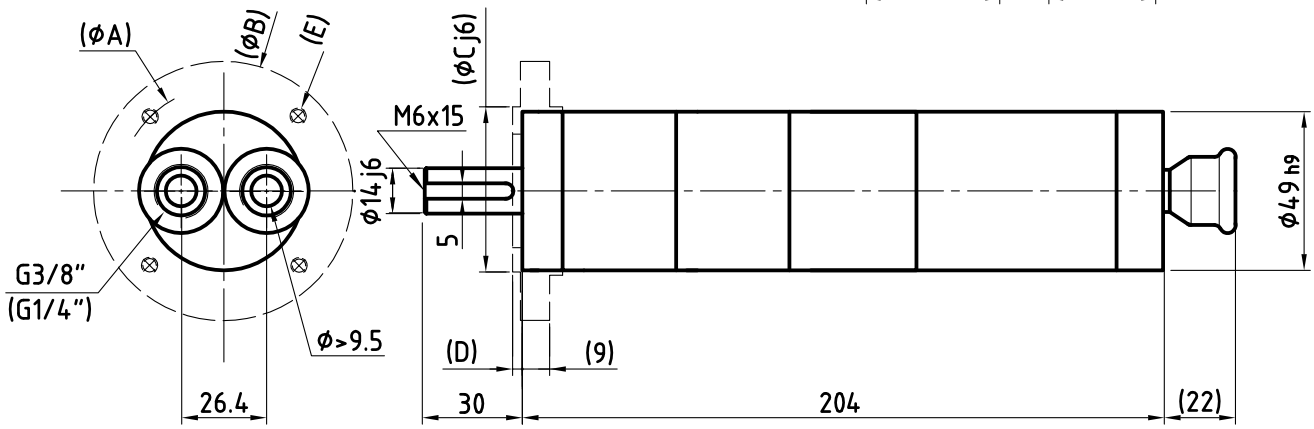

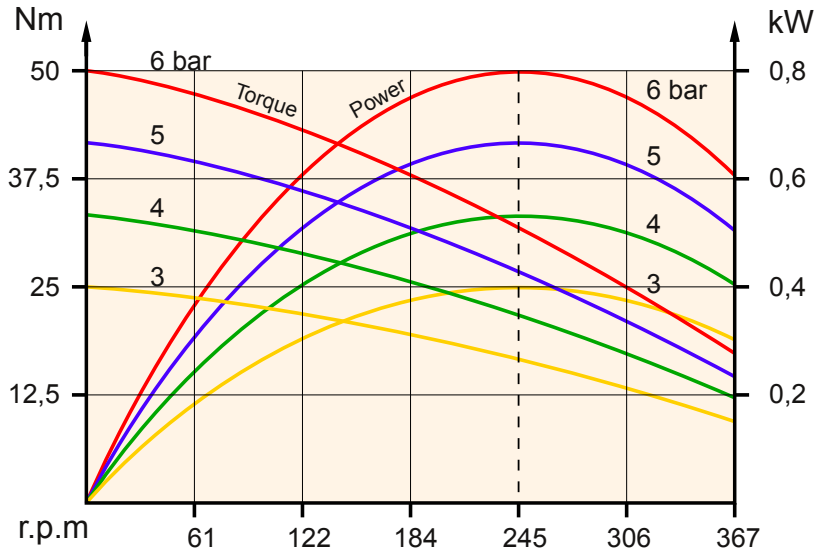

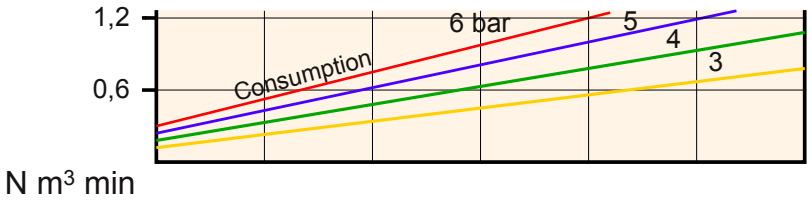

ferry PRODUITS
3, Allée des Grands Paquis - BP 60102 - F-54183 HEILLECOURT CEDEX
Tel : +33 (0)3 83 35 22 97 - Fax : +33 (0)3 83 32 47 73

DOUBLE ROTOR AIR MOTORS

Approx weight	Starting torque	Nominal torque	Useful speeds	Type		
3,6 kg	80 Nm	54,6 Nm	0 to 200 r.p.m Optimal speeds 30 to 130 r.p.m	NF 286 34	*0,62 kW* at *80 r.p.m*	**0,8 kW** at **140 r.p.m**
3,7 kg	131 Nm	89,9 Nm	0 to 110 r.p.m Optimal speeds 18 to 80 r.p.m	NF 286 37	*0,62 kW* at *50 r.p.m*	**0,8 kW** at **85 r.p.m**

Average perform under 6 bar pressure

	Minimum valve flow	Internal connection Ø	Internal pipe Ø
Inlet	1200 N l.min.	8 mm	9 mm
Exhaust	1200 N l.min.	10 mm	11 mm

	A	B	C	D	E
F75	75	90	60	2,5	M5
F165	165	200	130	3,5	Ø11,5
E	Square mounting				

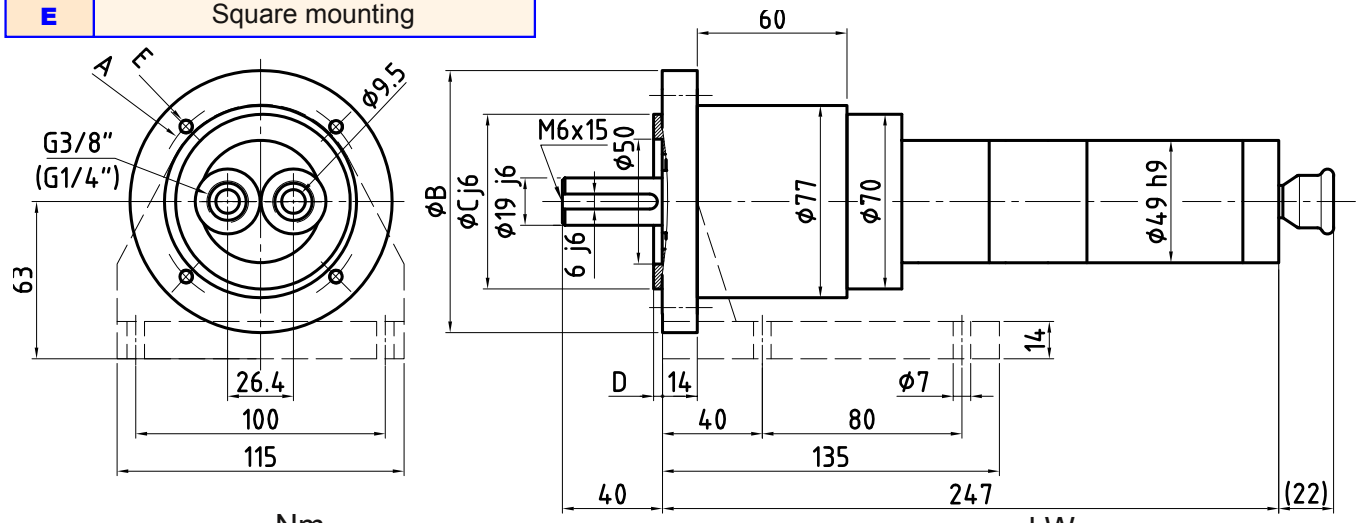

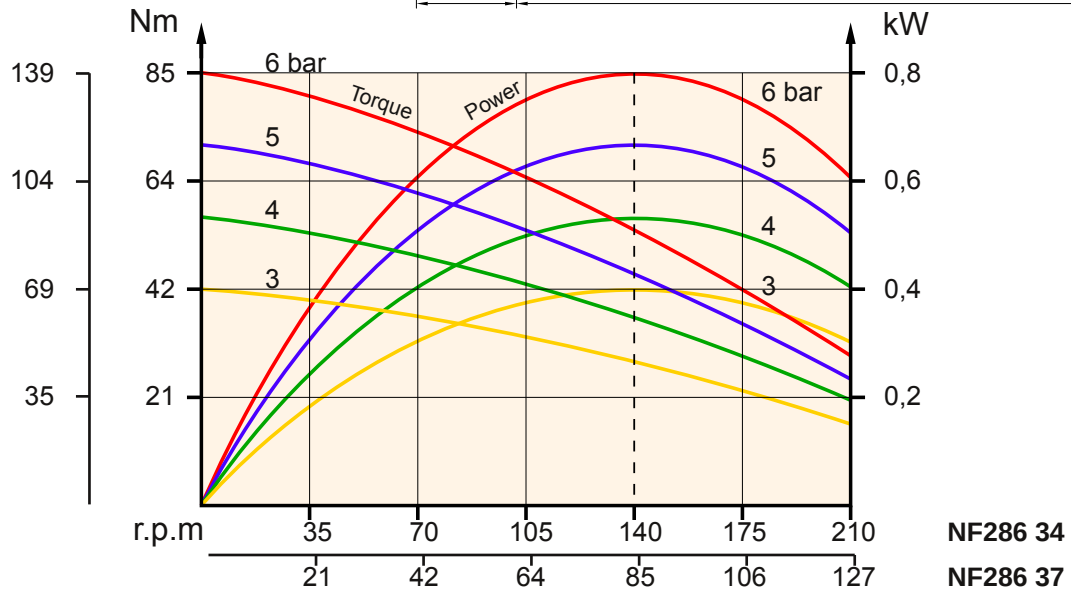

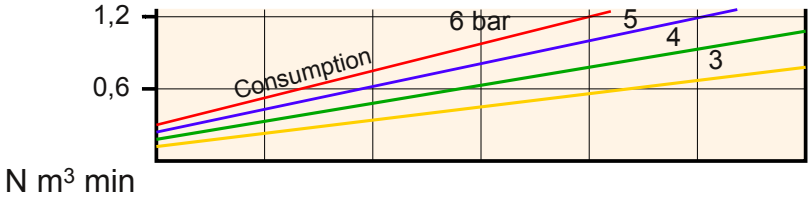

ferry PRODUITS
3, Allée des Grands Paquis - BP 60102 - F-54183 HEILLECOURT CEDEX
Tel : +33 (0)3 83 35 22 97 - Fax : +33 (0)3 83 32 47 73

DOUBLE ROTOR AIR MOTORS

Approx weight	Starting torque	Nominal torque	Useful speeds 0 to 19000 r.p.m / Optimal speeds 2500 to 11000 r.p.m	Type	*1 kW* at *6800 r.p.m*	**1,32 kW** at **12000 r.p.m**
1,7 kg	**1,55 Nm**	1,1 Nm		**SF 300**		

	Minimum valve flow	Internal connection Ø	Internal pipe Ø
Inlet	2000 N l.min.	10 mm	11 mm
Exhaust	2000 N l.min.	12 mm	13 mm

Average perform under 6 bar pressure

	A	B	C	D	E
F65	65	80	50	2,5	M5
F115	115	140	95	3	Ø9,5
E	Square mounting				

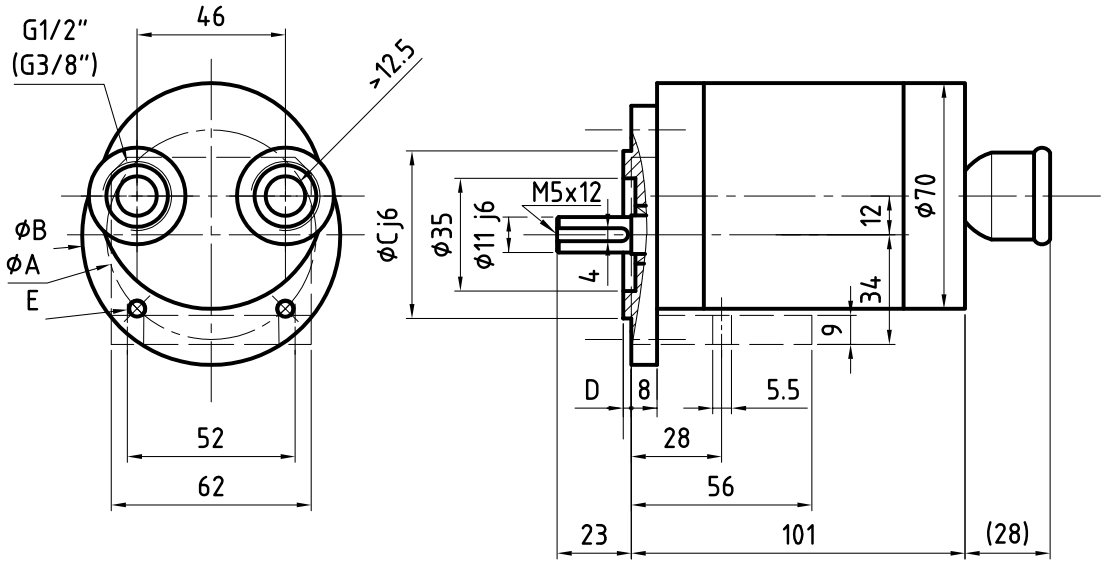

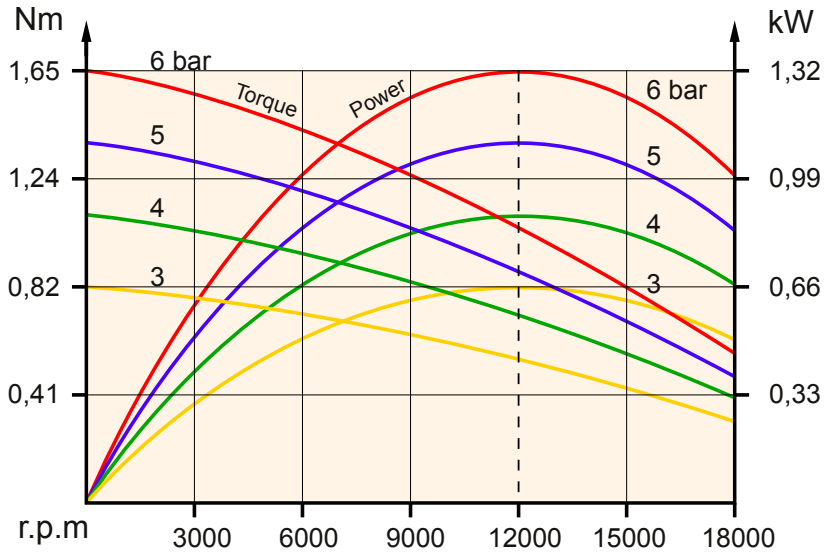

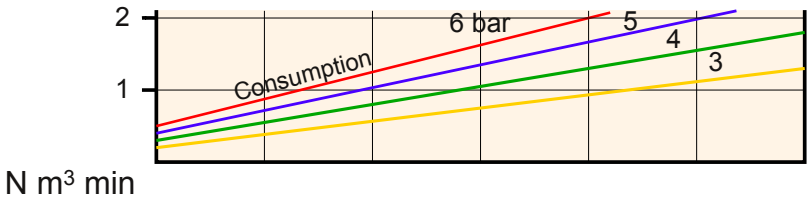

ferry PRODUITS
3, Allée des Grands Paquis - BP 60102 - F-54183 HEILLECOURT CEDEX
Tel : +33 (0)3 83 35 22 97 - Fax : +33 (0)3 83 32 47 73

DOUBLE ROTOR AIR MOTORS

Approx weight	Starting torque	Nominal torque	Useful speeds 0 to 4500 r.p.m / Optimal speeds 650 to 3000 r.p.m	Type	*1 kW* at *1750 r.p.m*	**1,3 kW** at **3100 r.p.m**
2,9 kg	**5,9 Nm**	4 Nm		**NF 300**		

	Minimum valve flow	Internal connection Ø	Internal pipe Ø
Average perform under 6 bar pressure			
Inlet	2000 N l.min.	10 mm	11 mm
Exhaust	2000 N l.min.	12 mm	13 mm

	A	B	C	D	E
F75	75	90	60	2,5	M5
F130	130	160	110	3,5	Ø9,5
E	Square mounting				

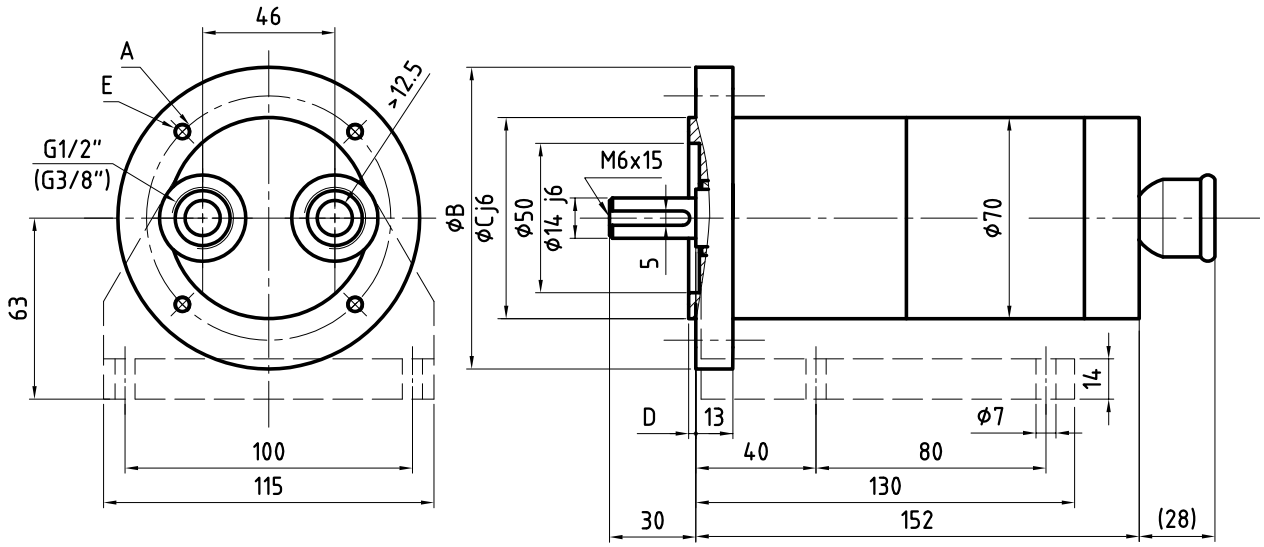

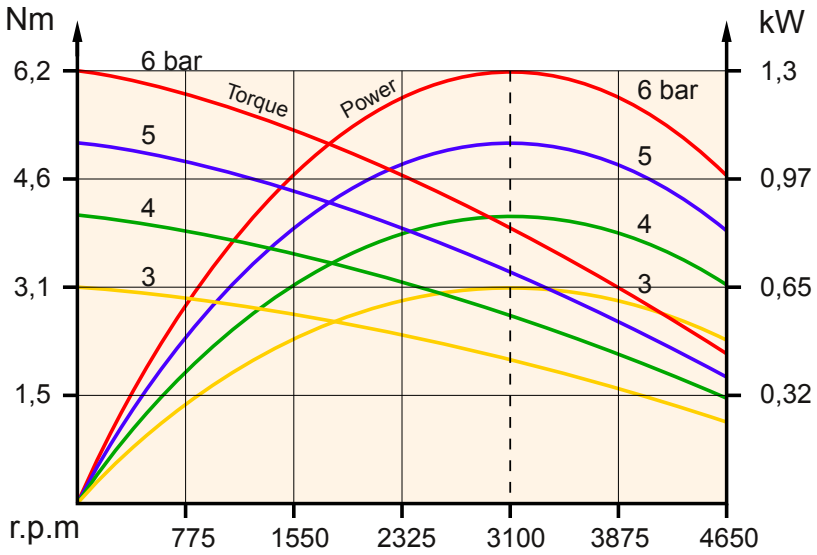

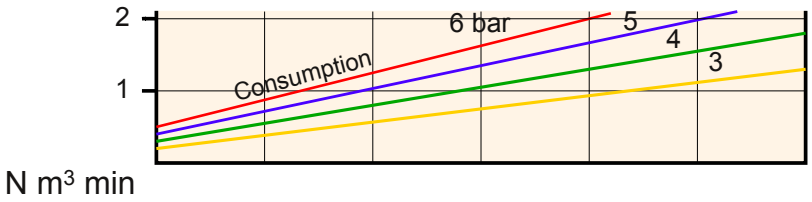

ferry PRODUITS
3, Allée des Grands Paquis - BP 60102 - F-54183 HEILLECOURT CEDEX
Tel : +33 (0)3 83 35 22 97 - Fax : +33 (0)3 83 32 47 73

DOUBLE ROTOR AIR MOTORS

Approx weight	Starting torque	Nominal torque	Useful speeds 0 to 2300 r.p.m / Optimal speeds 300 to 1500 r.p.m	Type	*1 kW* at *800 r.p.m*	**1,3 kW** at **1550 r.p.m**
3,7 kg	**11,7 Nm**	8 Nm		**NF 308**		

	Minimum valve flow	Internal connection Ø	Internal pipe Ø
Average perform under 6 bar pressure			
Inlet	2000 N l.min.	10 mm	11 mm
Exhaust	2000 N l.min.	12 mm	13 mm

	A	B	C	D	E
F75	75	90	60	2,5	M5
F130	130	160	110	3,5	Ø9,5
E	Square mounting				

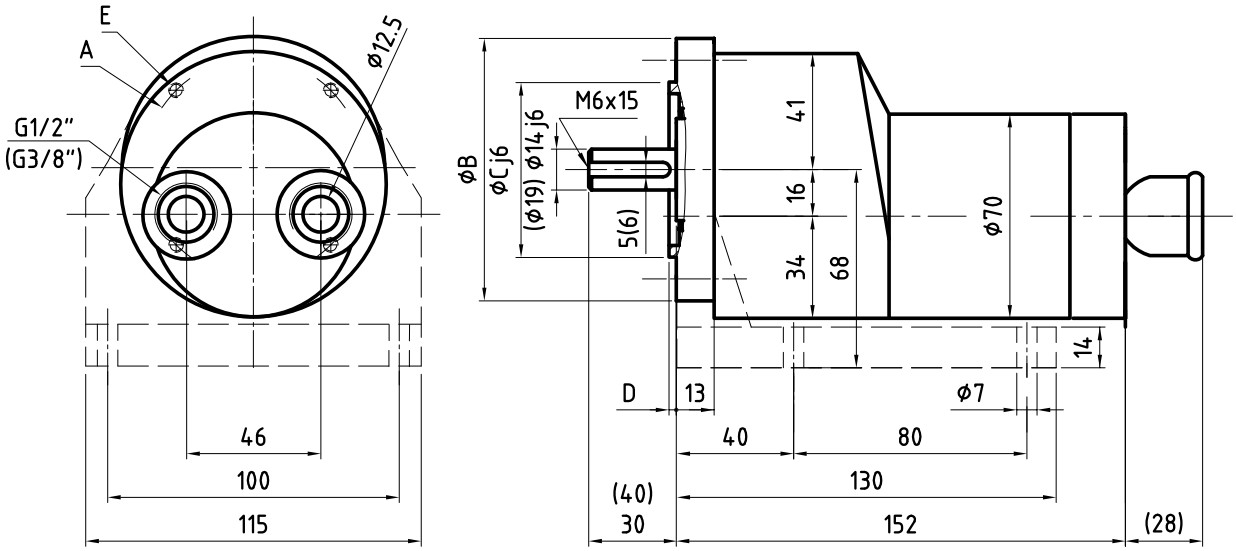

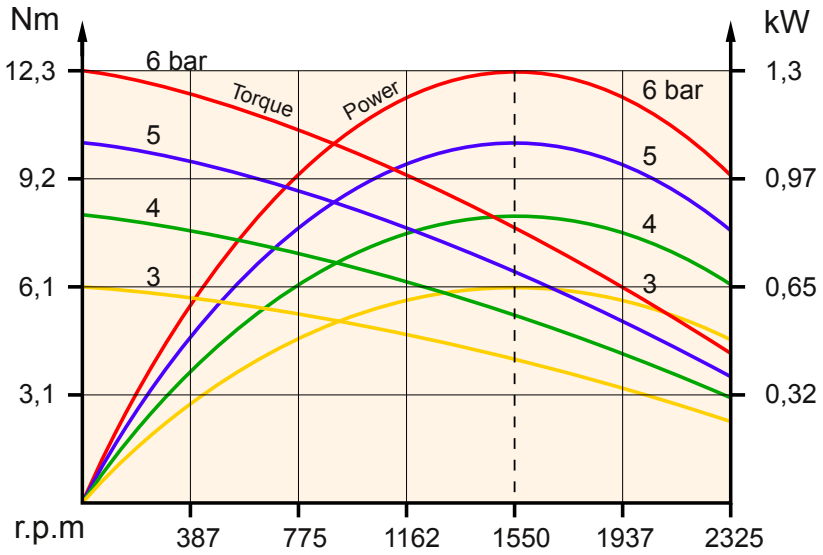

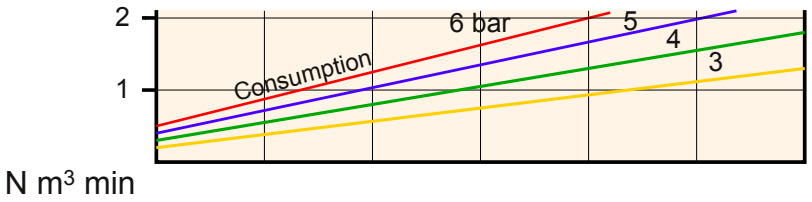

ferry PRODUITS
3, Allée des Grands Paquis - BP 60102 - F-54183 HEILLECOURT CEDEX
Tel : +33 (0)3 83 35 22 97 - Fax : +33 (0)3 83 32 47 73

DOUBLE ROTOR AIR MOTORS

Approx weight	Starting torque	Nominal torque	Useful speeds	Type		
3,9 kg	26 Nm	17,7 Nm	0 to 1000 r.p.m Optimal speeds 150 to 650 r.p.m	NF 334	*1 kW* at *400 r.p.m*	**1,3 kW** at **700 r.p.m**
4,1 kg	42 Nm	28,9 Nm	0 to 550 r.p.m Optimal speeds 80 to 400 r.p.m	NF 337	*1 kW* at *250 r.p.m*	**1,3 kW** at **430 r.p.m**

Average perform under 6 bar pressure

	Minimum valve flow	Internal connection Ø	Internal pipe Ø
Inlet	2000 N l.min.	10 mm	11 mm
Exhaust	2000 N l.min.	12 mm	13 mm

	A	B	C	D	E
F75	75	90	60	2,5	M5
F165	165	200	130	3,5	Ø11,5
E	Square mounting				

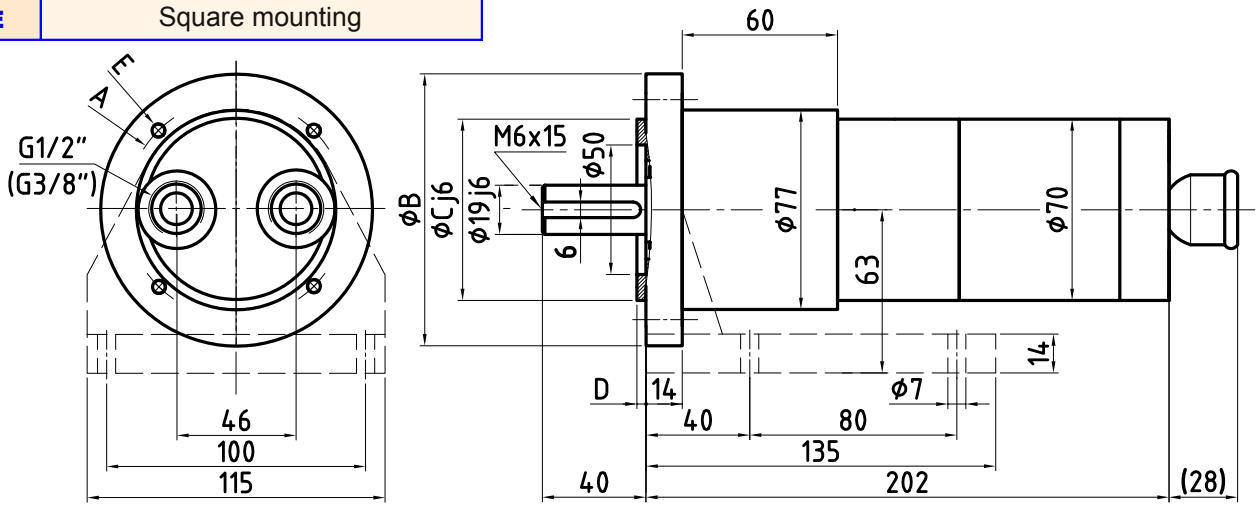

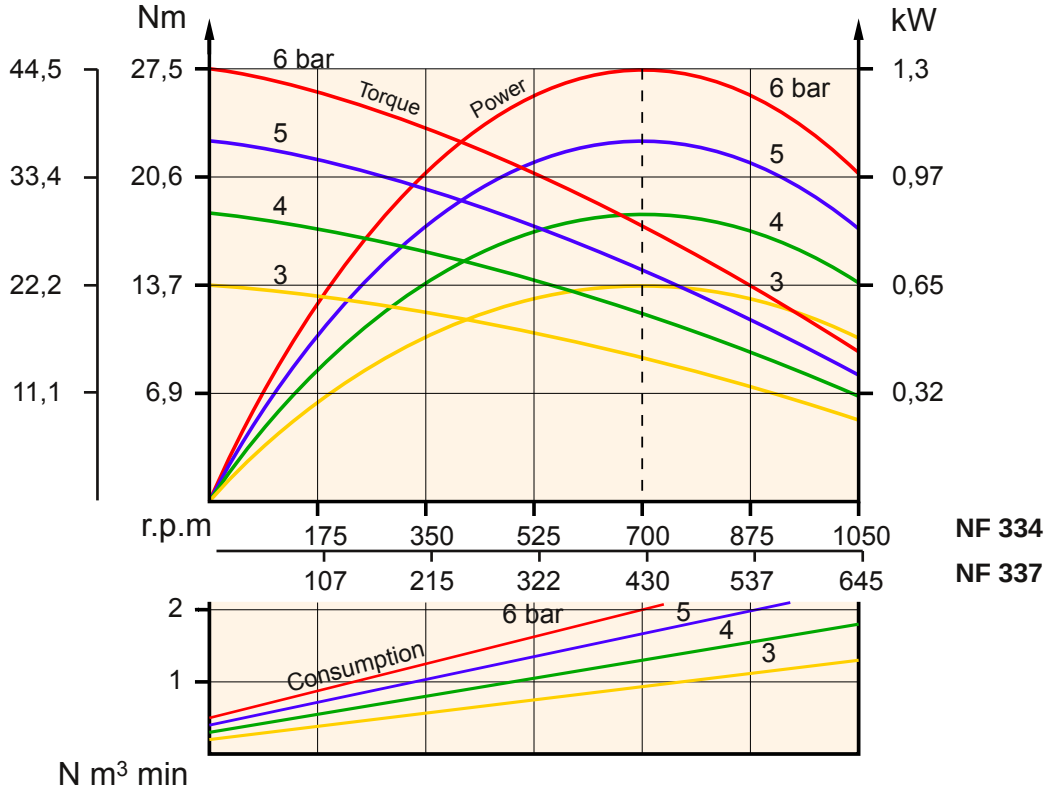

ferry PRODUITS
3, Allée des Grands Paquis - BP 60102 - F-54183 HEILLECOURT CEDEX
Tel : +33 (0)3 83 35 22 97 - Fax : +33 (0)3 83 32 47 73

DOUBLE ROTOR AIR MOTORS

Approx weight	Starting torque	Nominal torque	Useful speeds	Type		
5,8 kg	113 Nm	79,6 Nm	0 to 225 r.p.m Optimal speeds 30 to 145 r.p.m	NF 334 34	*0,95 kW* at *90 r.p.m*	**1,25 kW** at **150 r.p.m**
5,8 kg	142 Nm	99,5 Nm	0 to 170 r.p.m Optimal speeds 25 to 110 r.p.m	NF 334 36	*0,95 kW* at *70 r.p.m*	**1,25 kW** at **120 r.p.m**

Average perform under 6 bar pressure

	Minimum valve flow	Internal connection Ø	Internal pipe Ø
Inlet	2000 N l.min.	10 mm	11 mm
Exhaust	2000 N l.min.	12 mm	13 mm

	A	B	C	D	E
F75	75	90	60	2,5	M5
F165	165	200	130	3,5	Ø11,5
E	Square mounting				

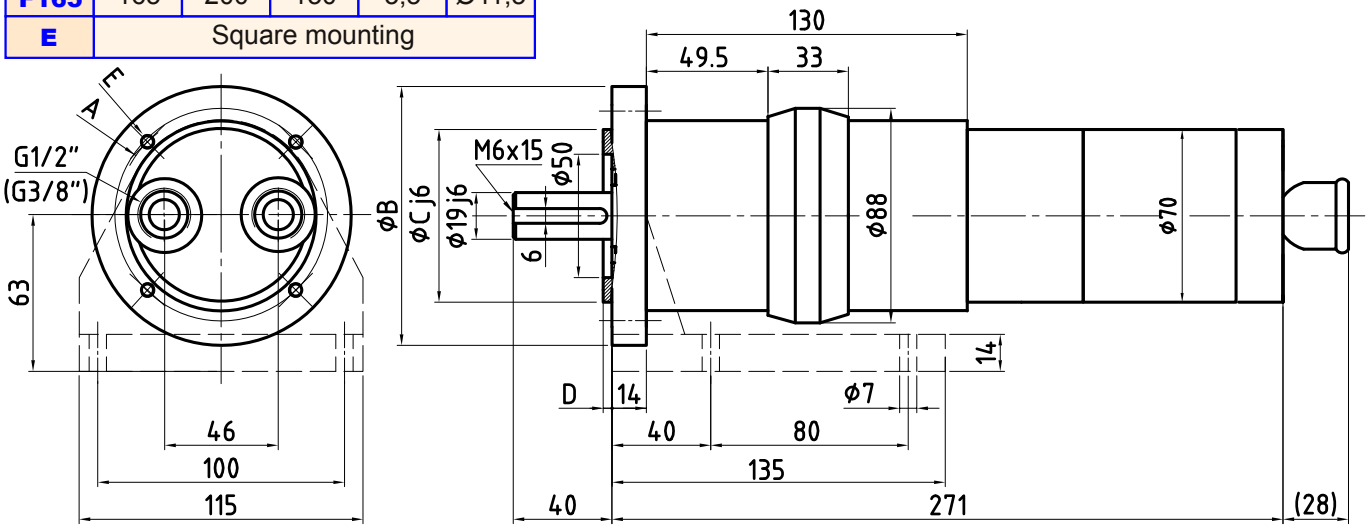

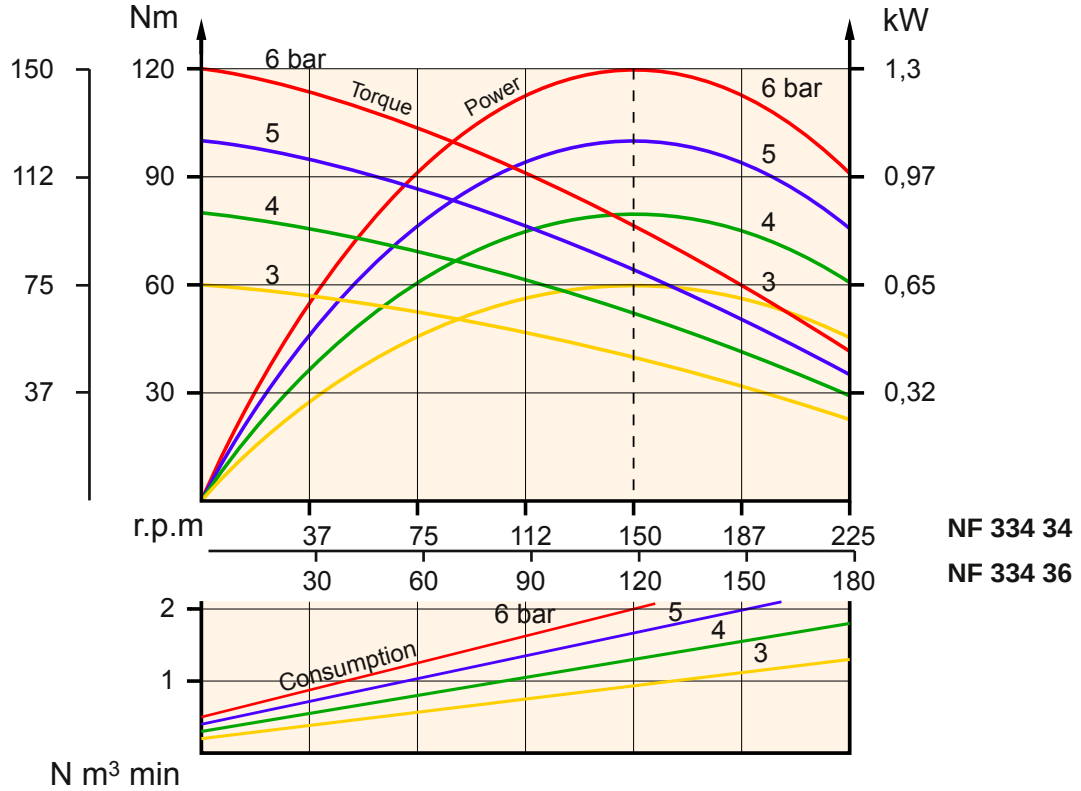

ferry PRODUITS
3, Allée des Grands Paquis - BP 60102 - F-54183 HEILLECOURT CEDEX
Tel : +33 (0)3 83 35 22 97 - Fax : +33 (0)3 83 32 47 73

DOUBLE ROTOR AIR MOTORS

Approx weight	Starting torque	Nominal torque	Useful speeds 0 to 11000 r.p.m / Optimal speeds 1400 to 7000 r.p.m	Type	*1,65 kW* at *4350 r.p.m*	**2,15 kW** at **7600 r.p.m**
3,8 kg	**3,6 Nm**	2,7 Nm		**SF 400**		

Average perform under 6 bar pressure

	Minimum valve flow	Internal connection Ø	Internal pipe Ø
Inlet	3000 N l.min.	12 mm	13 mm
Exhaust	3000 N l.min.	14 mm	15 mm

	A	B	C	D	E
F100	100	120	80	3	M6
F165	165	200	130	3,5	Ø11,5
E	Square mounting				

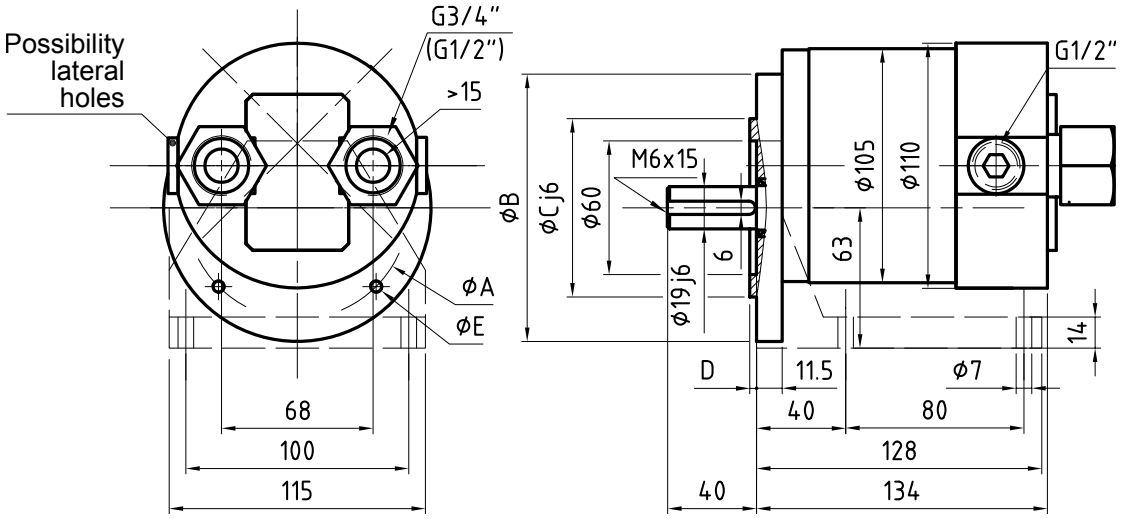

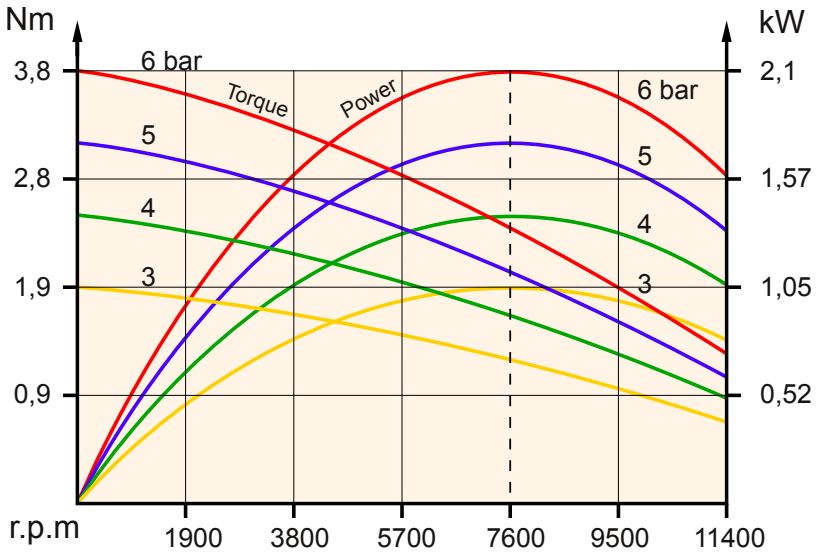

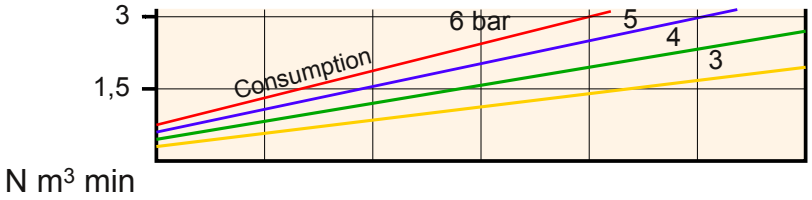

ferry PRODUITS
3, Allée des Grands Paquis - BP 60102 - F-54183 HEILLECOURT CEDEX
Tel : +33 (0)3 83 35 22 97 - Fax : +33 (0)3 83 32 47 73

DOUBLE ROTOR AIR MOTORS

Approx weight	Starting torque	Nominal torque	Useful speeds	Type		
6 kg	12,1 Nm	8,9 Nm	0 to 3300 r.p.m Optimal speeds 450 to 2000 r.p.m	EF 400	*1,6 kW* at *1300 r.p.m*	**2,1 kW** at **2250 r.p.m**
Approx weight	Starting torque	Nominal torque	Useful speeds	Type		
6 kg	14,4 Nm	10,8 Nm	0 to 2600 r.p.m Optimal speeds 400 to 1700 r.p.m	XEF 400	*1,6 kW* at *1050 r.p.m*	**2,1 kW** at **1850 r.p.m**

Average perform under 6 bar pressure

	Minimum valve flow	Internal connection Ø	Internal pipe Ø
Inlet	3000 N l.min.	12 mm	13 mm
Exhaust	3000 N l.min.	14 mm	15 mm

	A	B	C	D	E
F100	100	120	80	3	M6
F165	165	200	130	3,5	Ø11,5
E	Square mounting				

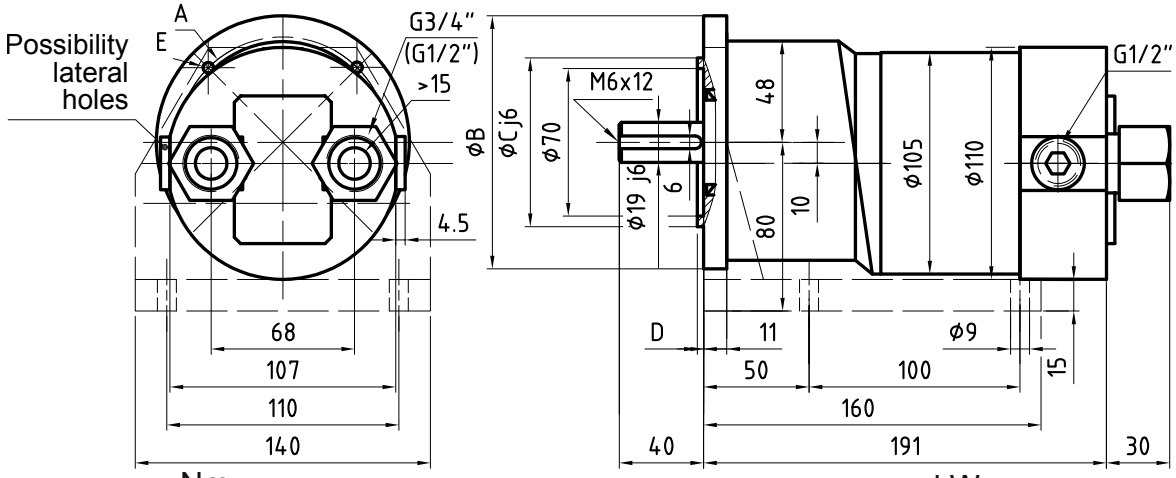

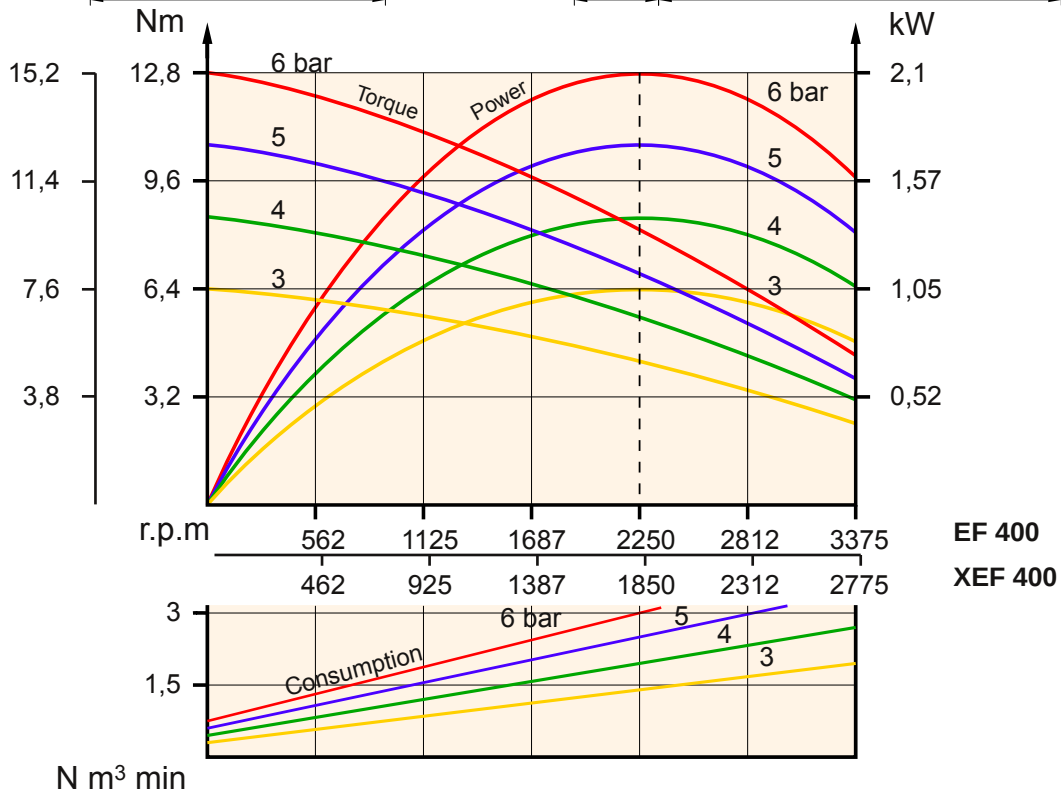

ferry PRODUITS
3, Allée des Grands Paquis - BP 60102 - F-54183 HEILLECOURT CEDEX
Tel : +33 (0)3 83 35 22 97 - Fax : +33 (0)3 83 32 47 73

DOUBLE ROTOR AIR MOTORS

Approx weight	Starting torque	Nominal torque	Useful speeds 0 to 1700 r.p.m / Optimal speeds 250 to 1100 r.p.m	Type	*1,6 kW* at *680 r.p.m*	**2,1 kW** at **1200 r.p.m**
6,2 kg	**22 Nm**	16,7 Nm		**LF 400**		

	Minimum valve flow	Internal connection Ø	Internal pipe Ø
Average perform under 6 bar pressure			
Inlet	3000 N l.min.	12 mm	13 mm
Exhaust	3000 N l.min.	14 mm	15 mm

	A	B	C	D	E
F100	100	120	80	3	M6
F165	165	200	130	3,5	Ø11,5
E	Square mounting				

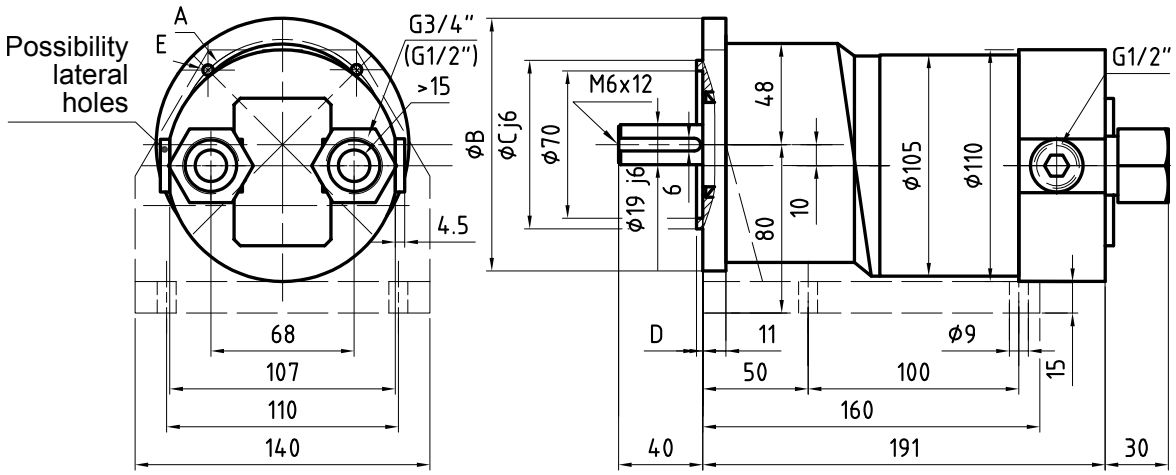

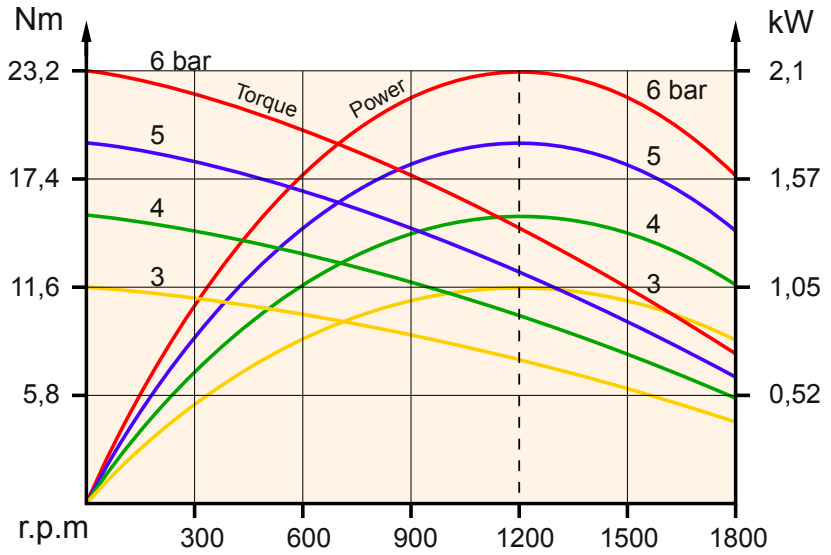

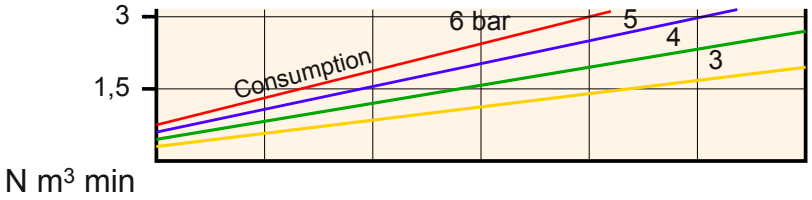

ferry PRODUITS
3, Allée des Grands Paquis - BP 60102 - F-54183 HEILLECOURT CEDEX
Tel : +33 (0)3 83 35 22 97 - Fax : +33 (0)3 83 32 47 73

DOUBLE ROTOR AIR MOTORS

Approx weight	Starting torque	Nominal torque	Useful speeds	Type		
8,1 kg	53 Nm	39,1 Nm	0 to 750 r.p.m **Optimal speeds** 100 to 450 r.p.m	**EF 434**	*1,55 kW* at *300 r.p.m*	**2,05 kW** at **500 r.p.m**
Approx weight	**Starting torque**	**Nominal torque**	**Useful speeds**	**Type**		
8,4 kg	98 Nm	72,5 Nm	0 to 380 r.p.m **Optimal speeds** 55 to 250 r.p.m	**LF 434**	*1,55 kW* at *155 r.p.m*	**2,05 kW** at **270 r.p.m**

Average perform under 6 bar pressure

	Minimum valve flow	Internal connection Ø	Internal pipe Ø
Inlet	3000 N l.min.	12 mm	13 mm
Exhaust	3000 N l.min.	14 mm	15 mm

	A	B	C	D	E
F100	100	120	80	3	M6
F165	165	200	130	3,5	Ø11,5
E	Square mounting				

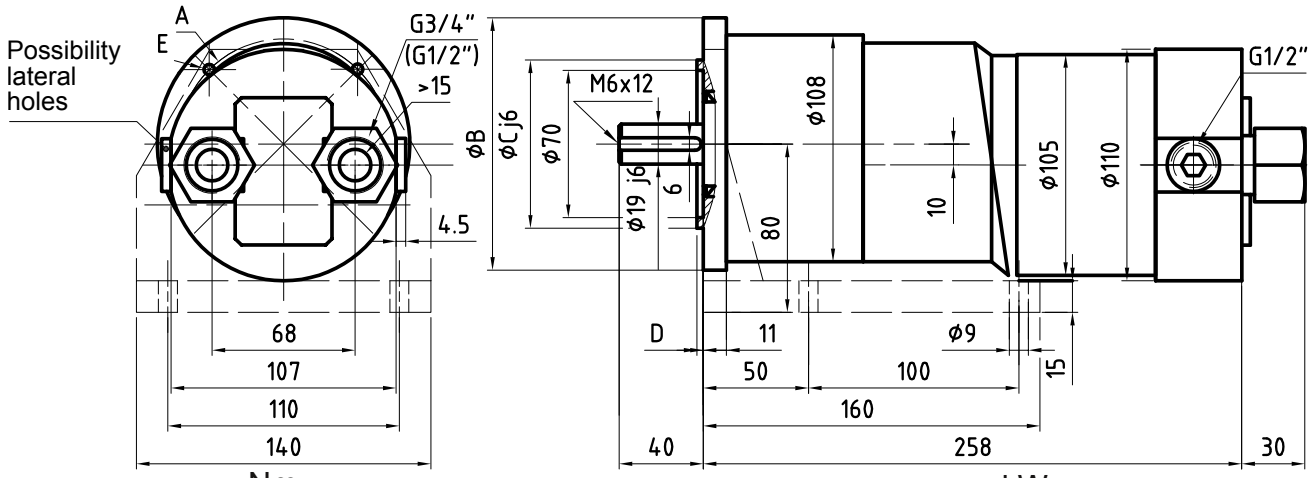

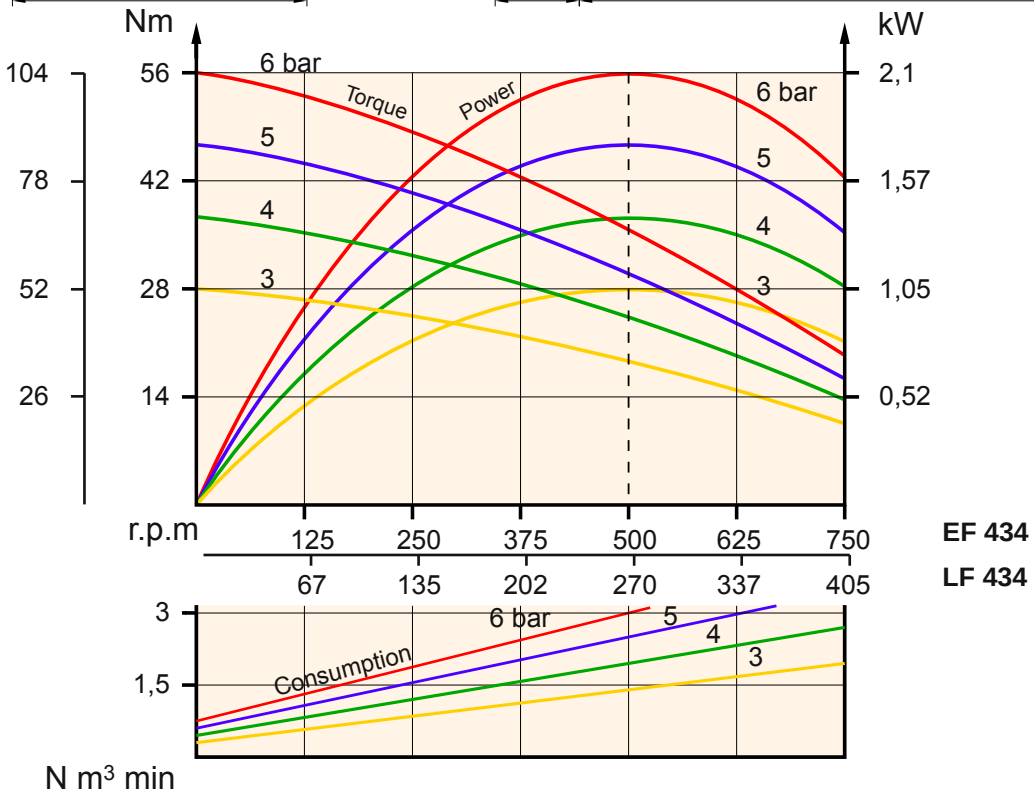

ferry PRODUITS
3, Allée des Grands Paquis - BP 60102 - F-54183 HEILLECOURT CEDEX
Tel : +33 (0)3 83 35 22 97 - Fax : +33 (0)3 83 32 47 73

DOUBLE ROTOR AIR MOTORS

Approx weight	Starting torque	Nominal torque	Useful speeds 0 to 11000 r.p.m / Optimal speeds 1400 to 7000 r.p.m	Type	*2,5 kW* at *4350 r.p.m*	**3,15 kW** at **7600 r.p.m**
4,8 kg	**5,4 Nm**	3,9 Nm		**SF 500**		

	Minimum valve flow	Internal connection Ø	Internal pipe Ø
Inlet	4000 N l.min.	15 mm	16 mm
Exhaust	4000 N l.min.	17 mm	19 mm

Average perform under 6 bar pressure

	A	B	C	D	E
F100	100	120	80	3	M6
F165	165	200	130	3,5	Ø11,5
E	Square mounting				

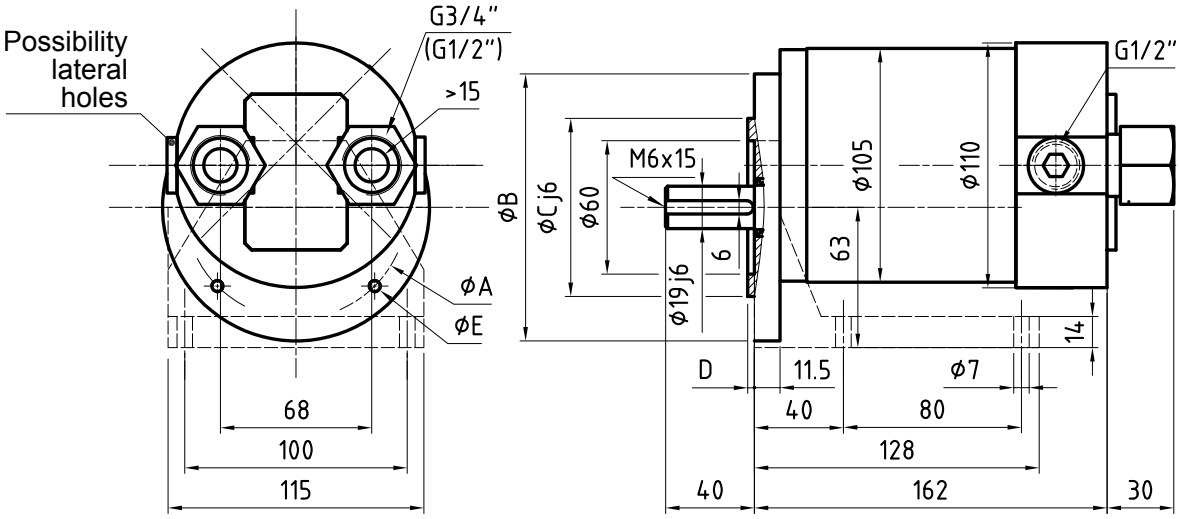

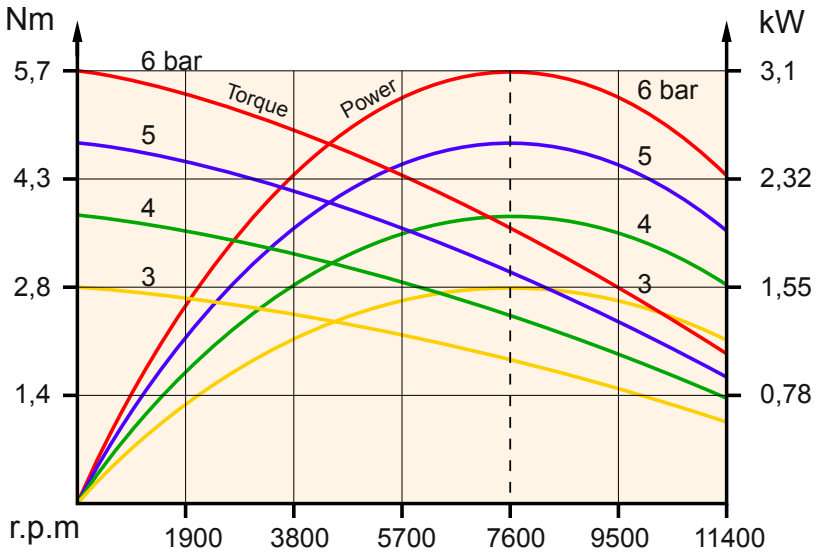

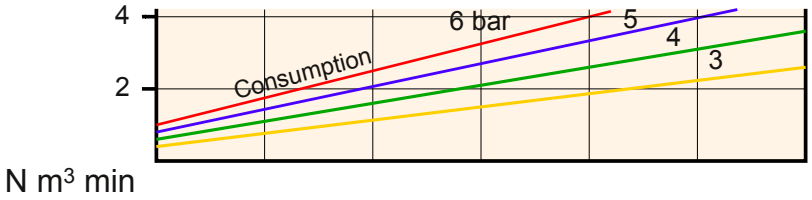

ferry PRODUITS
3, Allée des Grands Paquis - BP 60102 - F-54183 HEILLECOURT CEDEX
Tel : +33 (0)3 83 35 22 97 - Fax : +33 (0)3 83 32 47 73

DOUBLE ROTOR AIR MOTORS

Approx weight	Starting torque	Nominal torque	Useful speeds	Type		
7 kg	18 Nm	13,1 Nm	0 to 3300 r.p.m **Optimal speeds** 450 to 2000 r.p.m	**EF 500**	*2,5 kW* at *1300 r.p.m*	**3,1 kW** at **2250 r.p.m**
Approx weight	**Starting torque**	**Nominal torque**	**Useful speeds**	**Type**		
7,2 kg	33 Nm	24,6 Nm	0 to 1700 r.p.m **Optimal speeds** 250 to 1100 r.p.m	**LF 500**	*2,5 kW* at *680 r.p.m*	**3,1 kW** at **1200 r.p.m**

Average perform under 6 bar pressure

	Minimum valve flow	Internal connection Ø	Internal pipe Ø
Inlet	4000 N l.min.	15 mm	16 mm
Exhaust	4000 N l.min.	17 mm	19 mm

	A	B	C	D	E
F100	100	120	80	3	M6
F165	165	200	130	3,5	Ø11,5
E	Square mounting				

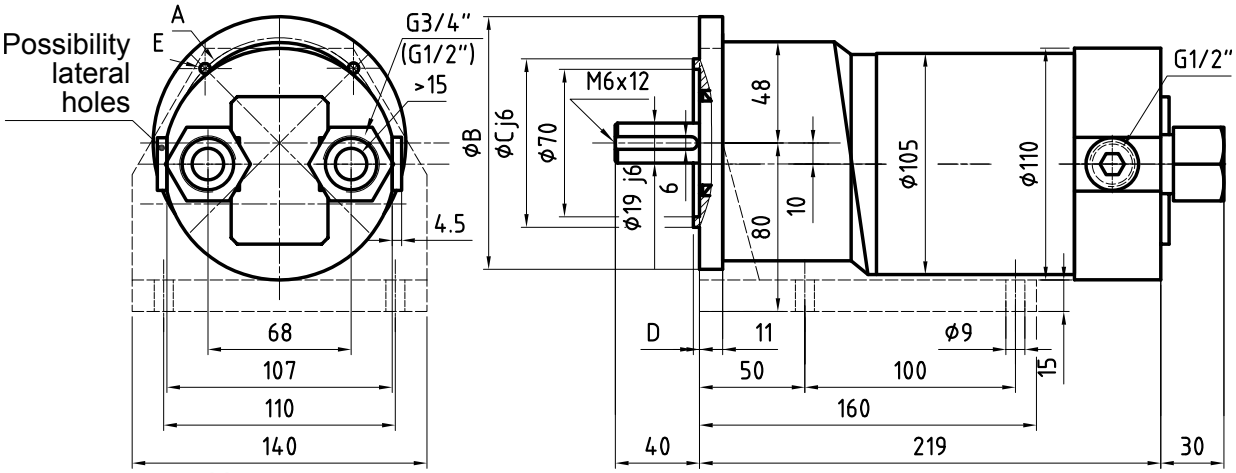

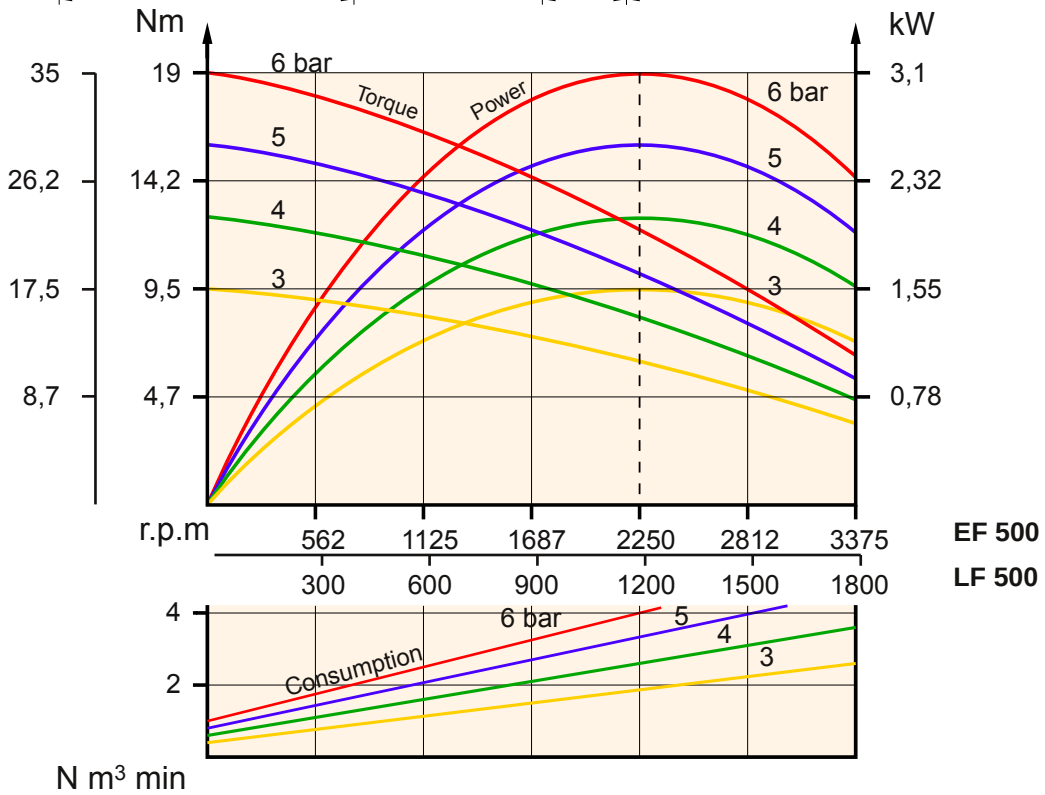

ferry PRODUITS
3, Allée des Grands Paquis - BP 60102 - F-54183 HEILLECOURT CEDEX
Tel : +33 (0)3 83 35 22 97 - Fax : +33 (0)3 83 32 47 73

DOUBLE ROTOR AIR MOTORS

Approx weight	Starting torque	Nominal torque	Useful speeds	Type		
9,1 kg	78 Nm	57,3 Nm	0 to 750 r.p.m **Optimal speeds** 100 to 450 r.p.m	**EF 534**	*2,55 kW* at *300 r.p.m*	**3 kW** at **500 r.p.m**
Approx weight	**Starting torque**	**Nominal torque**	**Useful speeds**	**Type**		
9,4 kg	144 Nm	106,1 Nm	0 to 380 r.p.m **Optimal speeds** 55 to 250 r.p.m	**LF 534**	*2,45 kW* at *155 r.p.m*	**3 kW** at **270 r.p.m**

Average perform under 6 bar pressure

	Minimum valve flow	Internal connection Ø	Internal pipe Ø
Inlet	4000 N l.min.	15 mm	16 mm
Exhaust	4000 N l.min.	17 mm	19 mm

	A	B	C	D	E
F100	100	120	80	3	M6
F165	165	200	130	3,5	Ø11,5
E	Square mounting				

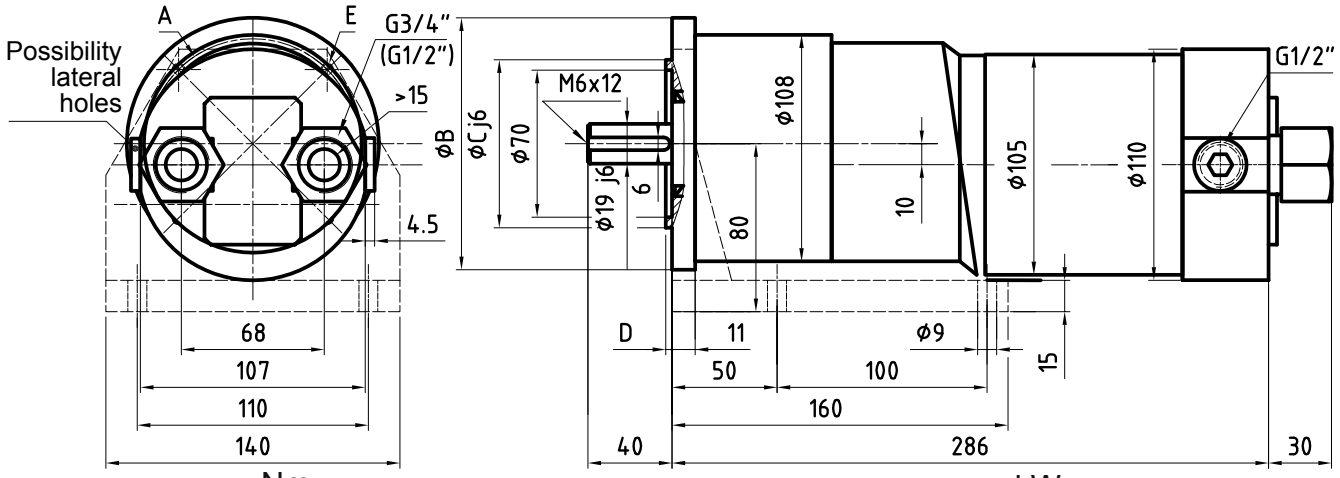

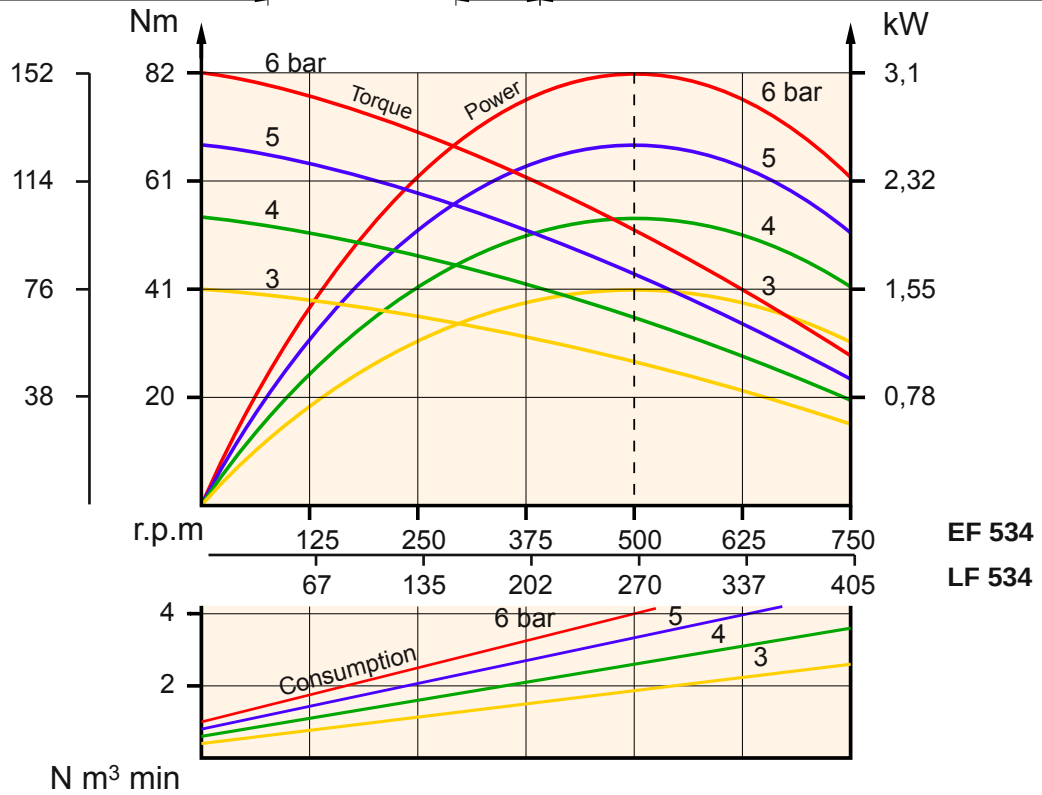

ferry PRODUITS
3, Allée des Grands Paquis - BP 60102 - F-54183 HEILLECOURT CEDEX
Tel : +33 (0)3 83 35 22 97 - Fax : +33 (0)3 83 32 47 73

DOUBLE ROTOR AIR MOTORS

Approx weight	Starting torque	Nominal torque	Useful speeds 0 to 9000 r.p.m / Optimal speeds 1100 to 5500 r.p.m	Type	3,2 kW at 3500 r.p.m	4,1 kW at 6000 r.p.m
9 kg	9,9 Nm	6,5 Nm		SF 600		

Average perform under 6 bar pressure

	Minimum valve flow	Internal connection Ø	Internal pipe Ø
Inlet	5000 N l.min.	18 mm	19 mm
Exhaust	5000 N l.min.	21 mm	22 mm

	A	B	C	D	E
F100	100	120	80	3	M6
F165	165	200	130	3,5	Ø11,5
E	Square mounting				

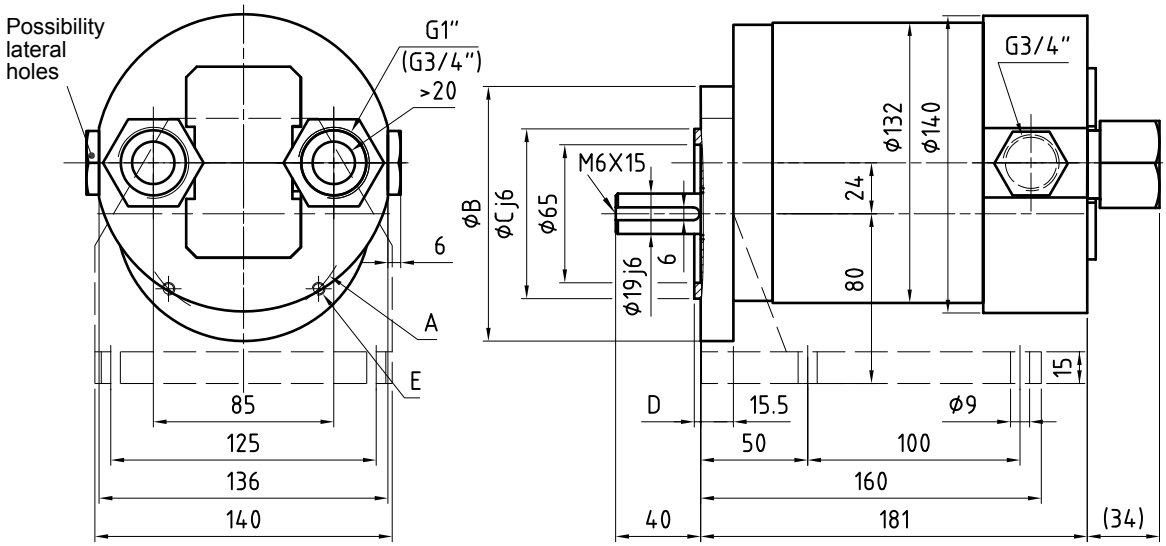

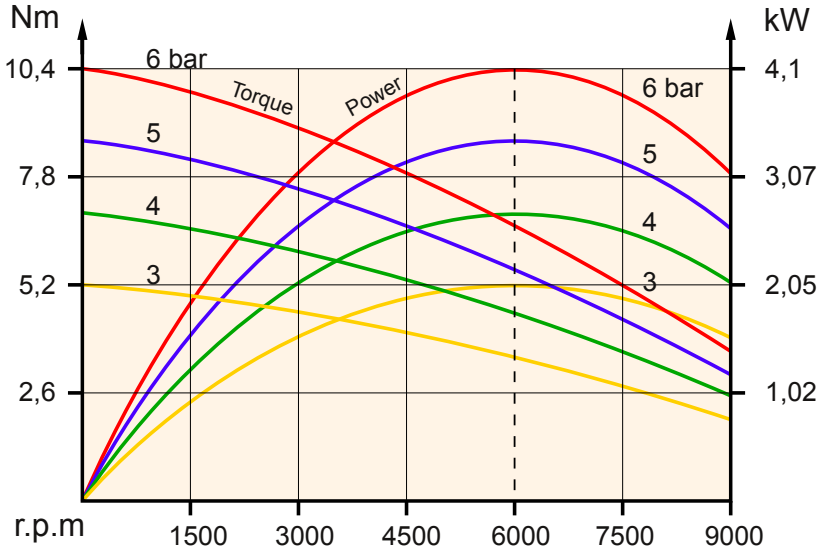

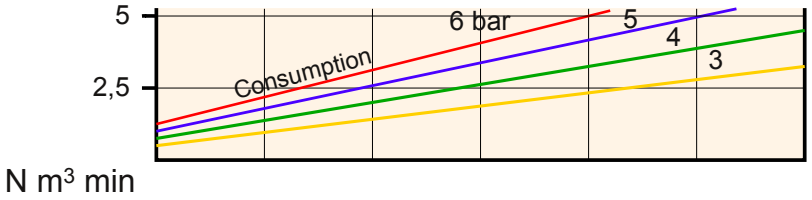

ferry PRODUITS
3, Allée des Grands Paquis - BP 60102 - F-54183 HEILLECOURT CEDEX
Tel : +33 (0)3 83 35 22 97 - Fax : +33 (0)3 83 32 47 73

DOUBLE ROTOR AIR MOTORS

Approx weight	Starting torque	Nominal torque	Useful speeds	Type		
12,5 kg	28,4 Nm	18,6 Nm	0 to 3000 r.p.m Optimal speeds 400 to 1900 r.p.m	EF 600	*3,2 kW* at *1200 r.p.m*	**4 kW** at **2050 r.p.m**
13,1 kg	55 Nm	36,3 Nm	0 to 1500 r.p.m Optimal speeds 180 to 900 r.p.m	LF 600	*3,2 kW* at *1200 r.p.m*	**4 kW** at **1050 r.p.m**

Average perform under 6 bar pressure

	Minimum valve flow	Internal connection Ø	Internal pipe Ø
Inlet	5000 N l.min.	18 mm	19 mm
Exhaust	5000 N l.min.	21 mm	22 mm

	A	B	C	D	E
F115	115	140	95	3	M8
F215	215	250	180	4	Ø14
E	Square mounting				

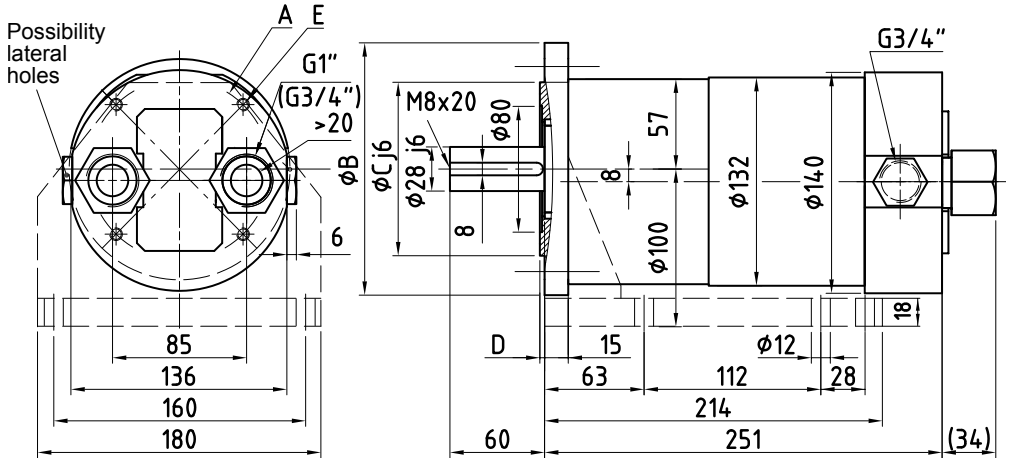

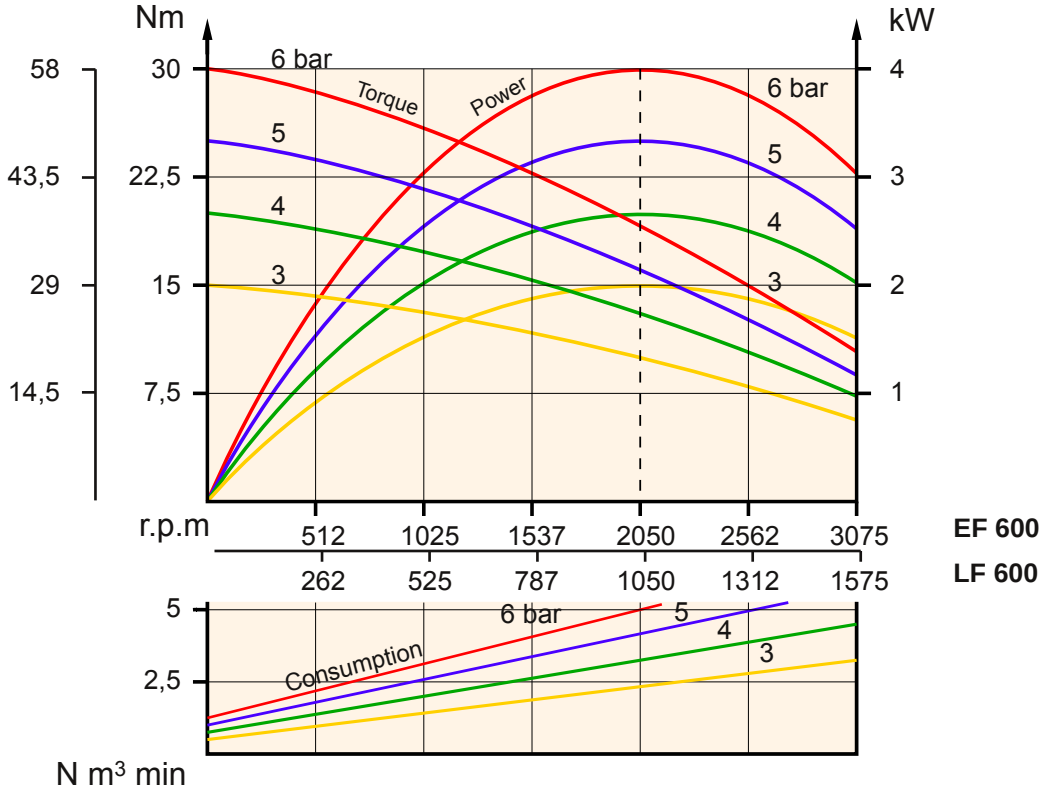

ferry PRODUITS
3, Allée des Grands Paquis - BP 60102 - F-54183 HEILLECOURT CEDEX
Tel : +33 (0)3 83 35 22 97 - Fax : +33 (0)3 83 32 47 73

DOUBLE ROTOR AIR MOTORS

Approx weight	Starting torque	Nominal torque	Useful speeds / Optimal speeds	Type		
23,5 kg	126 Nm	86,8 Nm	Useful speeds 0 to 650 r.p.m Optimal speeds 80 to 420 r.p.m	EF 675	*3,2 kW* at *250 r.p.m*	**4 kW** at **440 r.p.m**
24 kg	243 Nm	166 Nm	Useful speeds 0 to 320 r.p.m Optimal speeds 40 to 200 r.p.m	LF 675	*3,2 kW* at *125 r.p.m*	**4 kW** at **230 r.p.m**

Average perform under 6 bar pressure

	Minimum valve flow	Internal connection Ø	Internal pipe Ø
Inlet	5000 N l.min.	18 mm	19 mm
Exhaust	5000 N l.min.	21 mm	22 mm

	A	B	C	D	E
F115	115	140	95	3	M8
F215	215	250	180	4	Ø14
E	Square mounting				

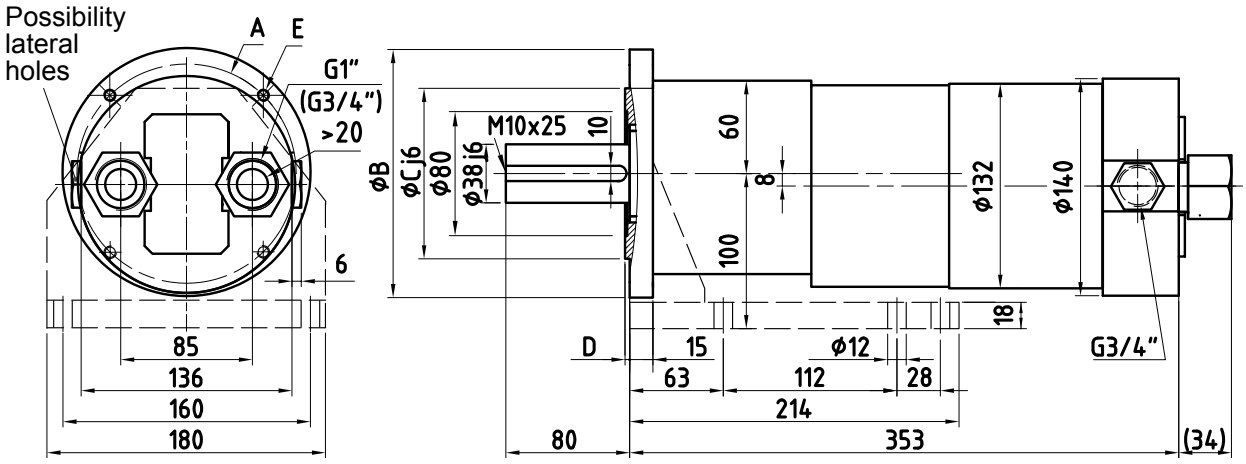

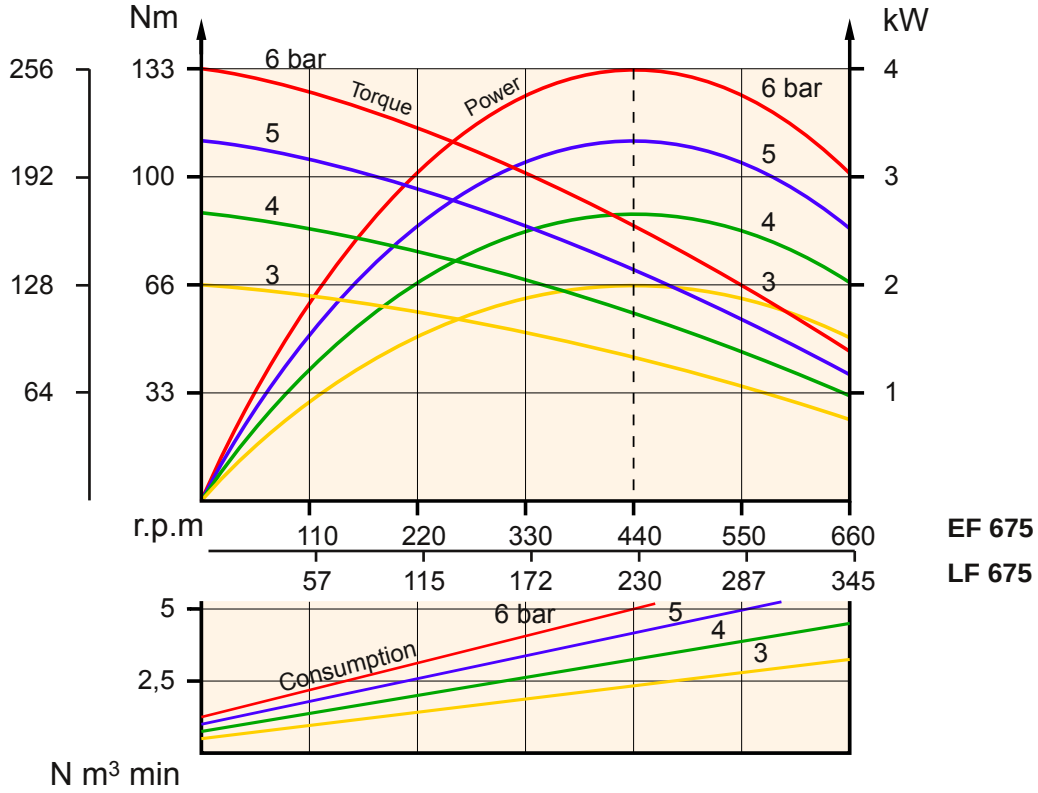

ferry PRODUITS
3, Allée des Grands Paquis - BP 60102 - F-54183 HEILLECOURT CEDEX
Tel : +33 (0)3 83 35 22 97 - Fax : +33 (0)3 83 32 47 73

DOUBLE ROTOR AIR MOTORS

Approx weight	Starting torque	Nominal torque	Useful speeds 0 to 9000 r.p.m / Optimal speeds 1100 to 5500 r.p.m	Type	*4 kW* at *3500 r.p.m*	**5,1 kW** at **6000 r.p.m**
10,4 kg	**12,1 Nm**	8,1 Nm		**SF 700**		

Average perform under 6 bar pressure

	Minimum valve flow	Internal connection Ø	Internal pipe Ø
Inlet	6000 N l.min.	21 mm	25 mm
Exhaust	6000 N l.min.	24 mm	27 mm

	A	B	C	D	E
F100	100	120	80	3	M6
F165	165	200	130	3,5	Ø11,5
E	Square mounting				

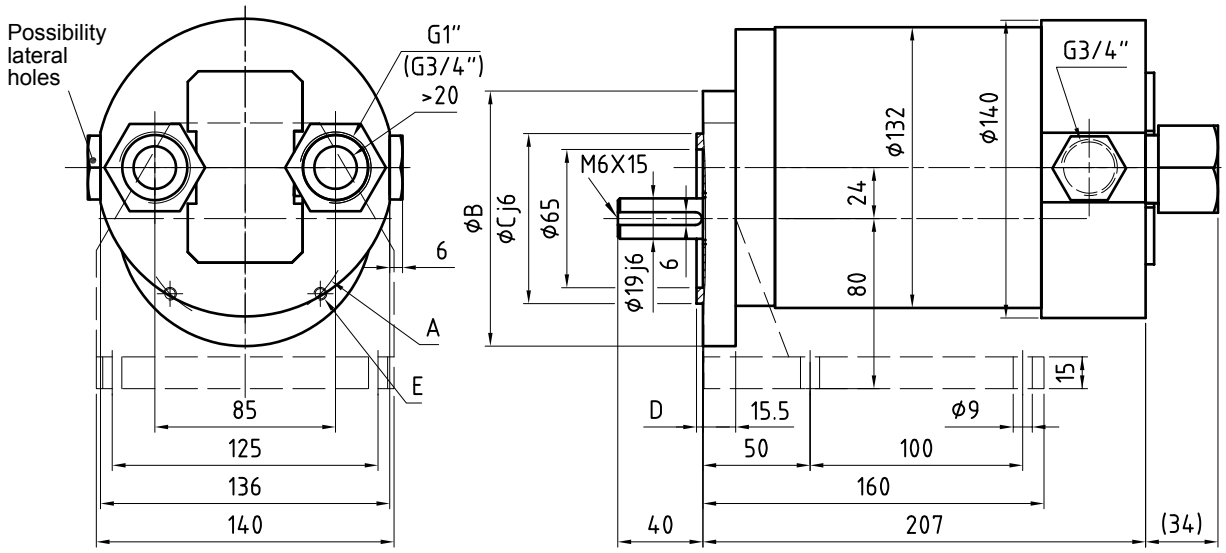

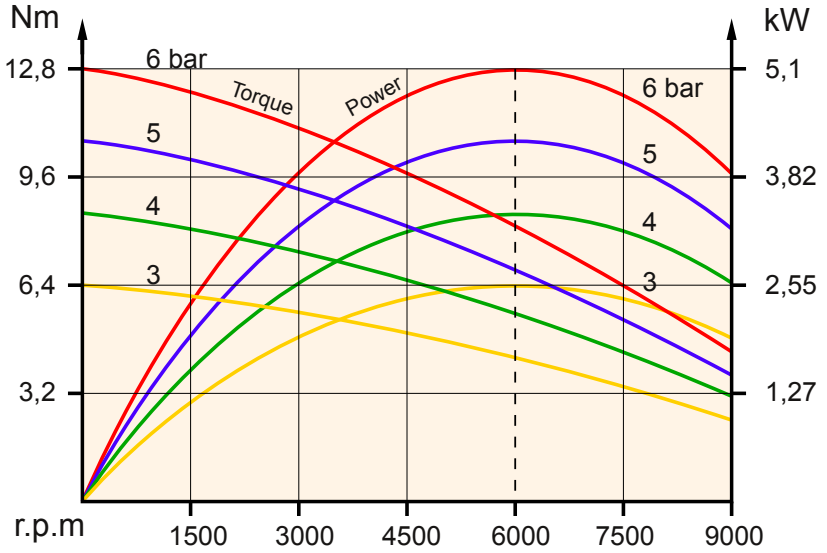

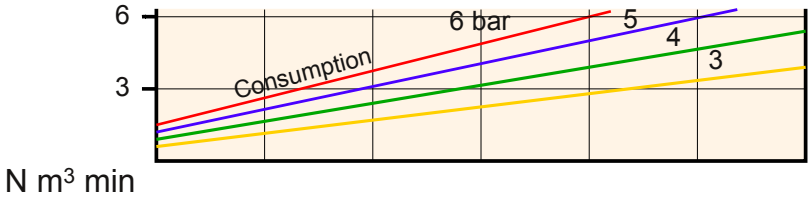

ferry PRODUITS
3, Allée des Grands Paquis - BP 60102 - F-54183 HEILLECOURT CEDEX
Tel : +33 (0)3 83 35 22 97 - Fax : +33 (0)3 83 32 47 73

DOUBLE ROTOR AIR MOTORS

Approx weight	Starting torque	Nominal torque	Useful speeds	Type		
13,9 kg	35 Nm	23,3 Nm	0 to 3000 r.p.m Optimal speeds 400 to 1900 r.p.m	EF 700	*4 kW* at *1200 r.p.m*	**5 kW** at **2050 r.p.m**
Approx weight	**Starting torque**	**Nominal torque**	**Useful speeds**	**Type**		
14,5 kg	69 Nm	45,5 Nm	0 to 1500 r.p.m Optimal speeds 180 to 900 r.p.m	LF 700	*4 kW* at *600 r.p.m*	**5 kW** at **1050 r.p.m**

Average perform under 6 bar pressure

	Minimum valve flow	Internal connection Ø	Internal pipe Ø
Inlet	6000 N l.min.	21 mm	25 mm
Exhaust	6000 N l.min.	24 mm	27 mm

	A	B	C	D	E
F115	115	140	95	3	M8
F215	215	250	180	4	Ø14
E	Square mounting				

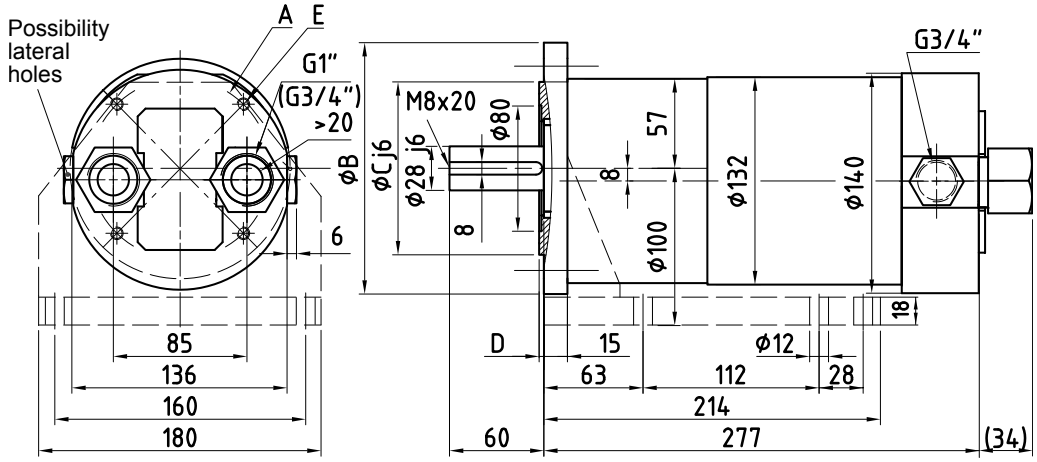

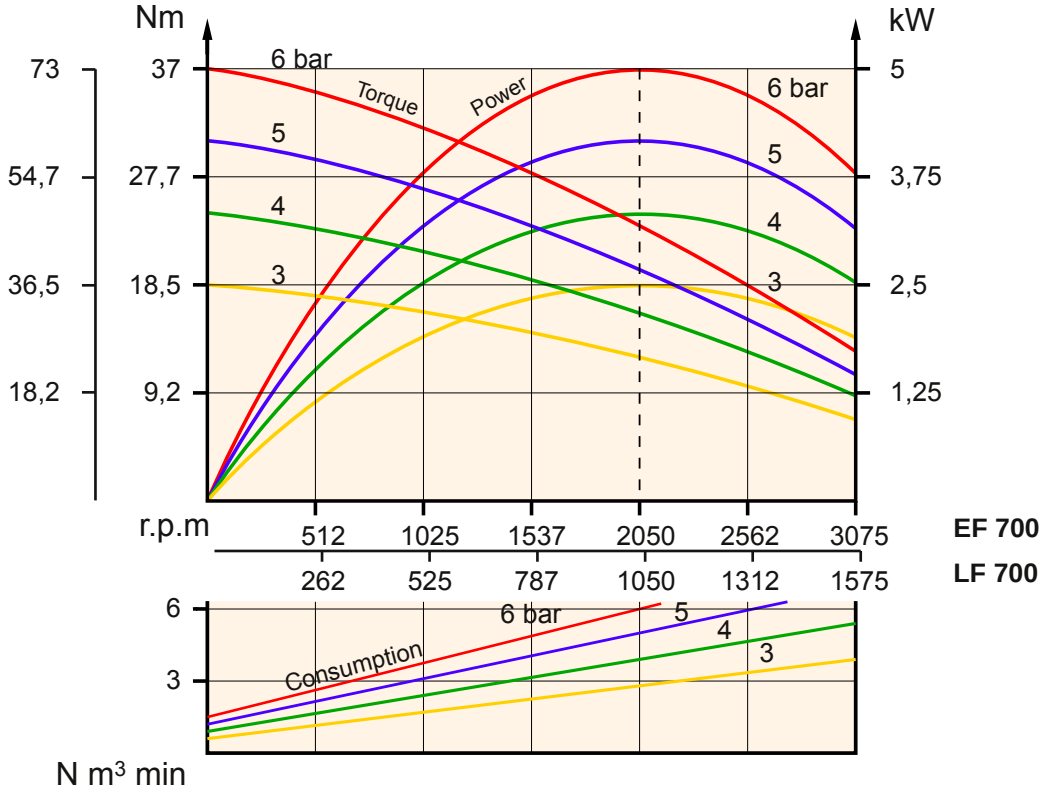

ferry PRODUITS
3, Allée des Grands Paquis - BP 60102 - F-54183 HEILLECOURT CEDEX
Tel : +33 (0)3 83 35 22 97 - Fax : +33 (0)3 83 32 47 73

DOUBLE ROTOR AIR MOTORS

Approx weight	Starting torque	Nominal torque	Useful speeds	Type		
24,8 kg	153 Nm	106 Nm	0 to 650 r.p.m Optimal speeds 80 to 420 r.p.m	EF 775	*3,7 kW* at *250 r.p.m*	**4,9 kW** at **440 r.p.m**
Approx weight	Starting torque	Nominal torque	Useful speeds	Type		
25,4 kg	297 Nm	203 Nm	0 to 320 r.p.m Optimal speeds 40 to 200 r.p.m	LF 775	*3,7 kW* at *125 r.p.m*	**4,9 kW** at **230 r.p.m**

Average perform under 6 bar pressure

	Minimum valve flow	Internal connection Ø	Internal pipe Ø
Inlet	6000 N l.min.	21 mm	25 mm
Exhaust	6000 N l.min.	24 mm	27 mm

	A	B	C	D	E
F115	115	140	95	3	M8
F215	215	250	180	4	Ø14
E	Square mounting				

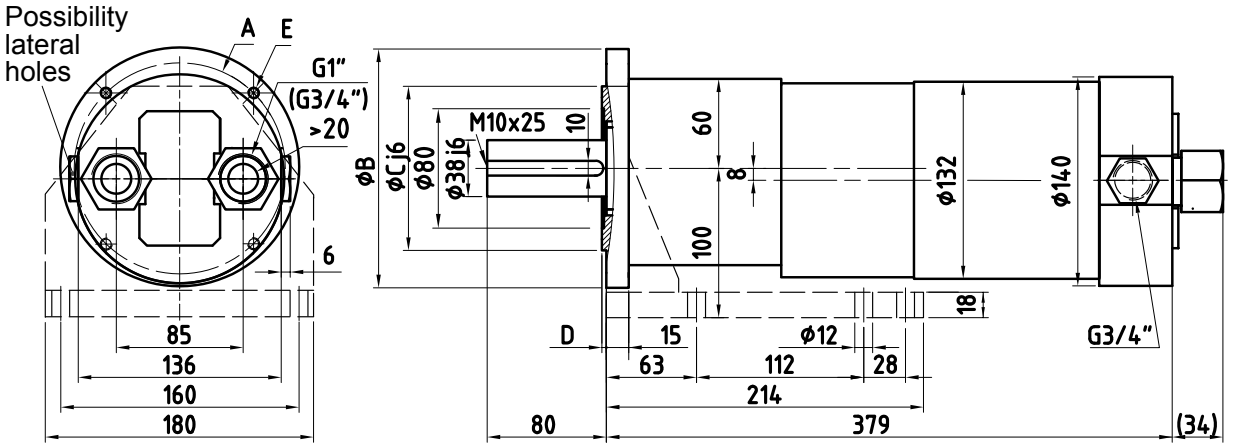

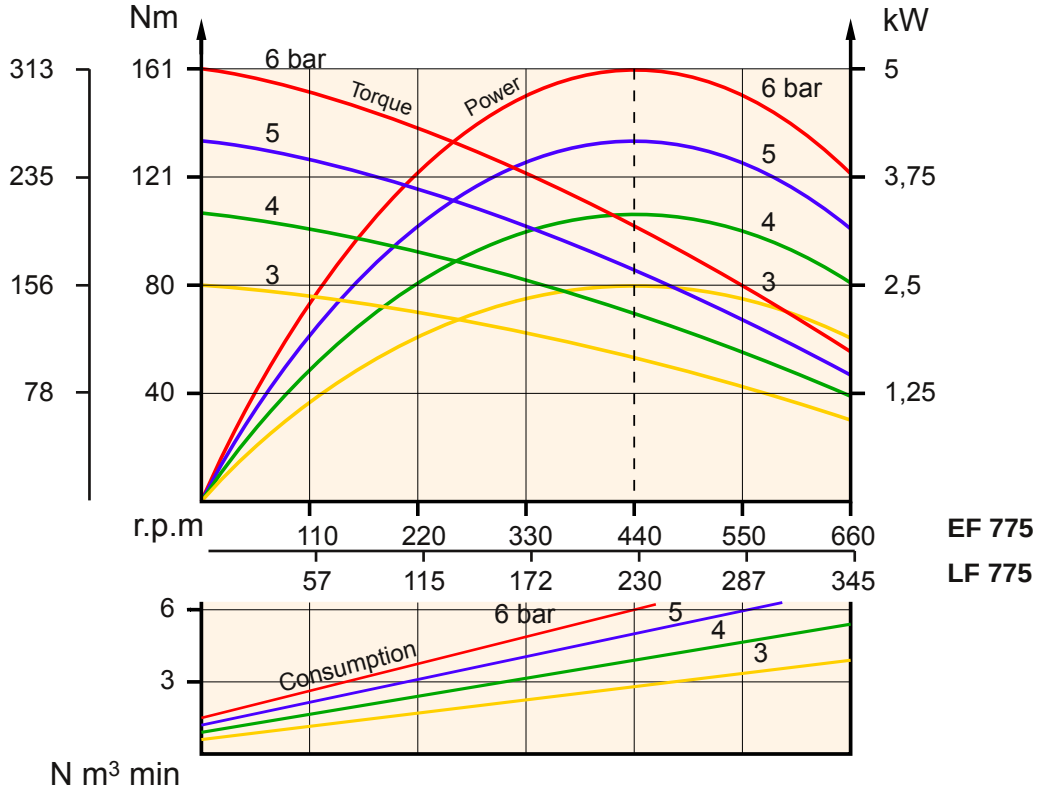

ferry PRODUITS
3, Allée des Grands Paquis - BP 60102 - F-54183 HEILLECOURT CEDEX
Tel : +33 (0)3 83 35 22 97 - Fax : +33 (0)3 83 32 47 73

DOUBLE ROTOR AIR MOTORS

Approx weight	Starting torque	Nominal torque	Useful speeds 0 to 2600 r.p.m / Optimal speeds 320 to 1600 r.p.m	Type	*7 kW* at *1000 r.p.m*	**10 kW** at **1700 r.p.m**
34 kg	**82 Nm**	56 Nm		**2XE7X**		

Average perform under 6 bar pressure

	Minimum valve flow	Internal connection Ø	Internal pipe Ø
Inlet	12000 N l.min.	30 mm	38 mm
Exhaust	12000 N l.min.	34 mm	45 mm

	A	B	C	D	E
F115	115	140	95	3	M8
F215	215	250	180	4	Ø14
E	Square mounting				

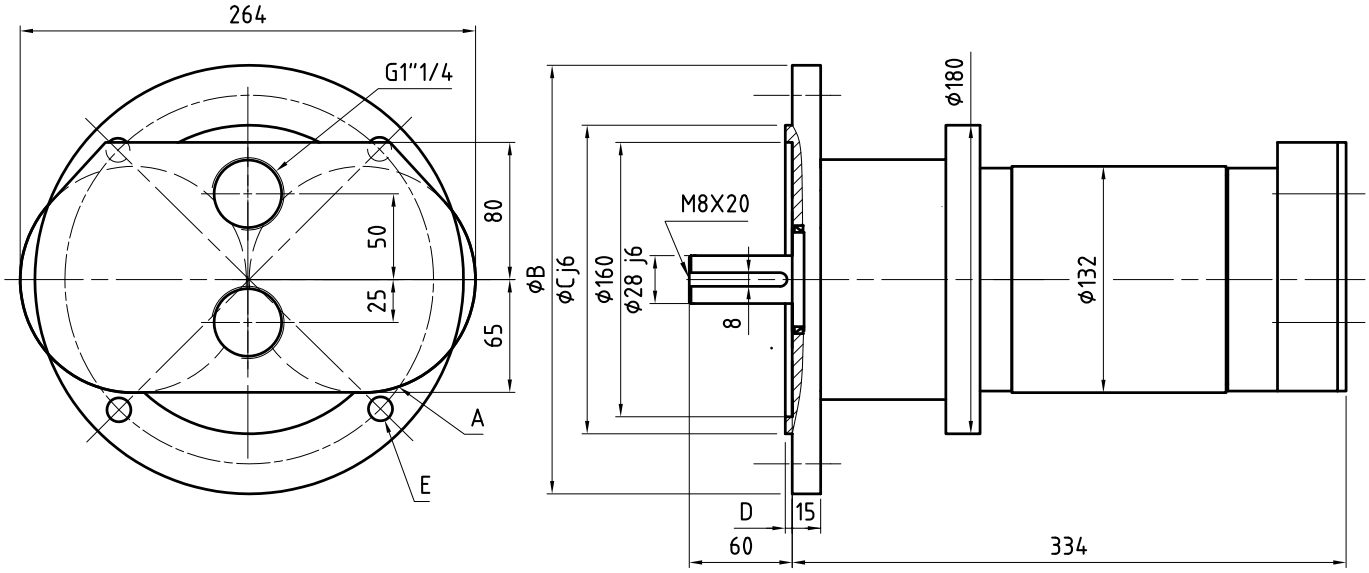

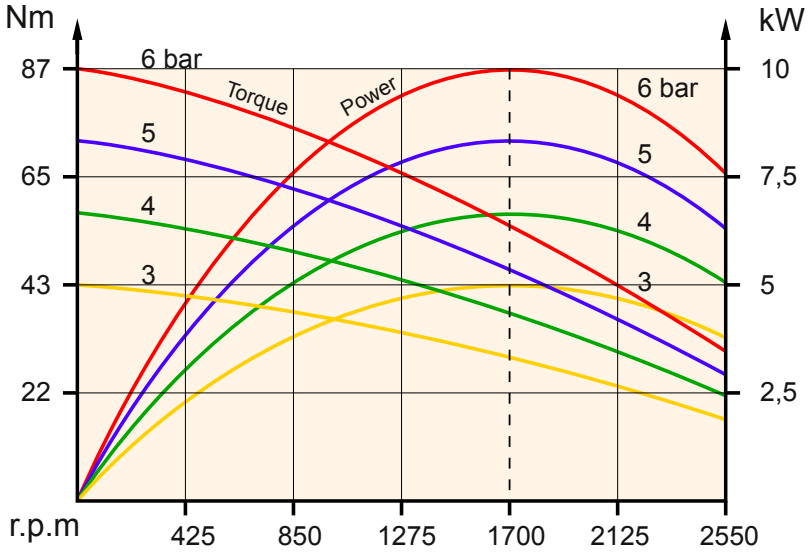

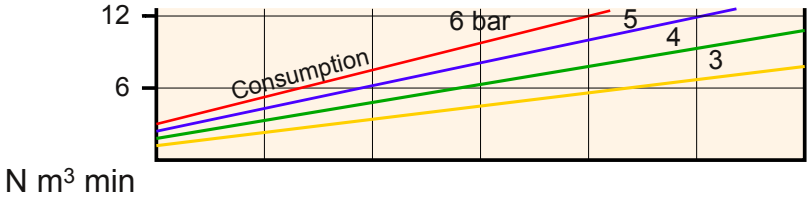

ferry PRODUITS
3, Allée des Grands Paquis - BP 60102 - F-54183 HEILLECOURT CEDEX
Tel : +33 (0)3 83 35 22 97 - Fax : +33 (0)3 83 32 47 73

DOUBLE ROTOR AIR MOTORS

Approx weight	Starting torque	Nominal torque	Useful speeds 0 to 6700 r.p.m / Optimal speeds 800 to 4000 r.p.m	Type	6,7 kW at 2500 r.p.m	8,6 kW at 4500 r.p.m
27 kg	27 Nm	18,2 Nm		SF 800		

Average perform under 6 bar pressure

	Minimum valve flow	Internal connection Ø	Internal pipe Ø
Inlet	10000 N l.min.	28 mm	35 mm
Exhaust	10000 N l.min.	32 mm	42 mm

	A	B	C	D	E
F215	215	250	180	4	Ø14
E	Square mounting				

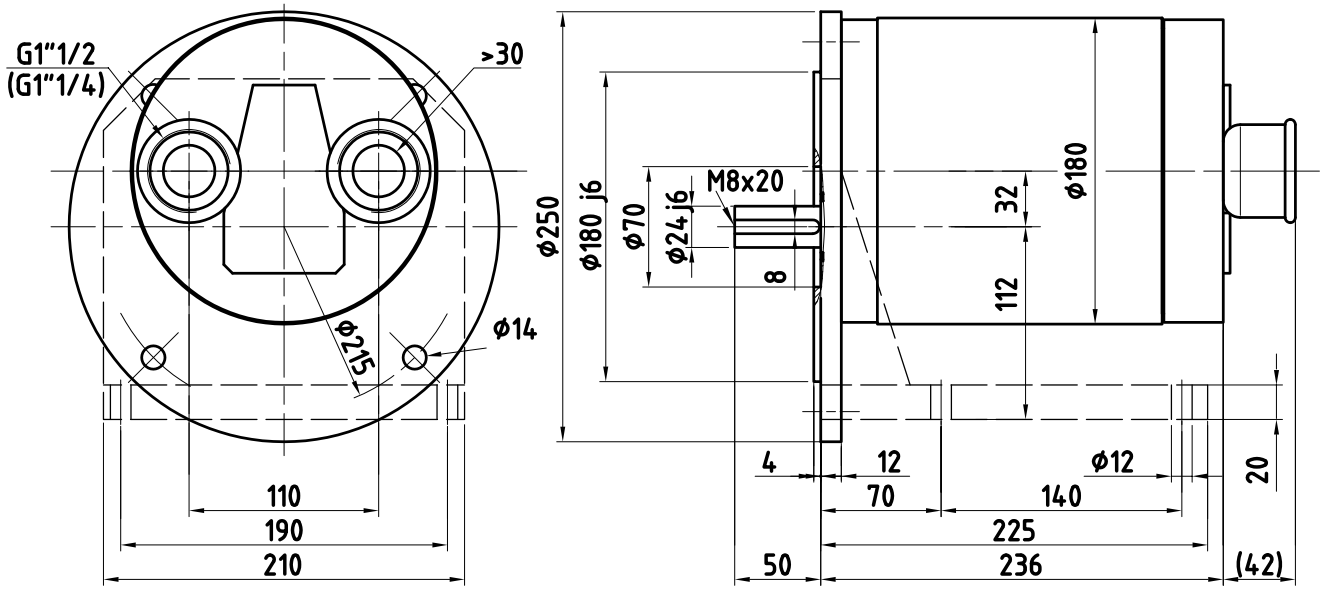

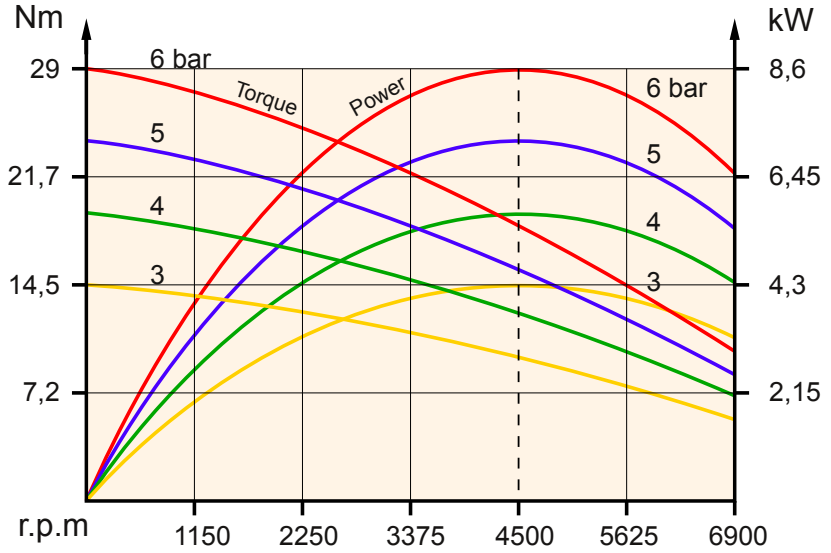

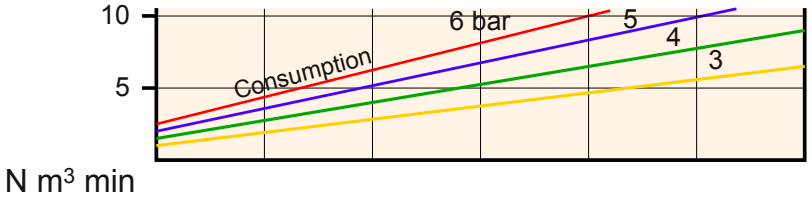

ferry PRODUITS
3, Allée des Grands Paquis - BP 60102 - F-54183 HEILLECOURT CEDEX
Tel : +33 (0)3 83 35 22 97 - Fax : +33 (0)3 83 32 47 73

DOUBLE ROTOR AIR MOTORS

Approx weight	Starting torque	Nominal torque	Useful speeds	Type		
30 kg	53 Nm	34,8 Nm	0 to 3400 r.p.m Optimal speeds 400 to 2000 r.p.m	EF 800	*6,2 kW* at *1250 r.p.m*	**8,4 kW** at **2300 r.p.m**
31 kg	138 Nm	91,1 Nm	0 to 1250 r.p.m Optimal speeds 150 to 800 r.p.m	LF 800	*6,2 kW* at *470 r.p.m*	**8,4 kW** at **880 r.p.m**

Average perform under 6 bar pressure

	Minimum valve flow	Internal connection Ø	Internal pipe Ø
Inlet	10000 N l.min.	28 mm	35 mm
Exhaust	10000 N l.min.	32 mm	42 mm

	A	B	C	D	E
F215	215	250	180	4	Ø14
F265	265	300	230	4	Ø14
E	Square mounting				

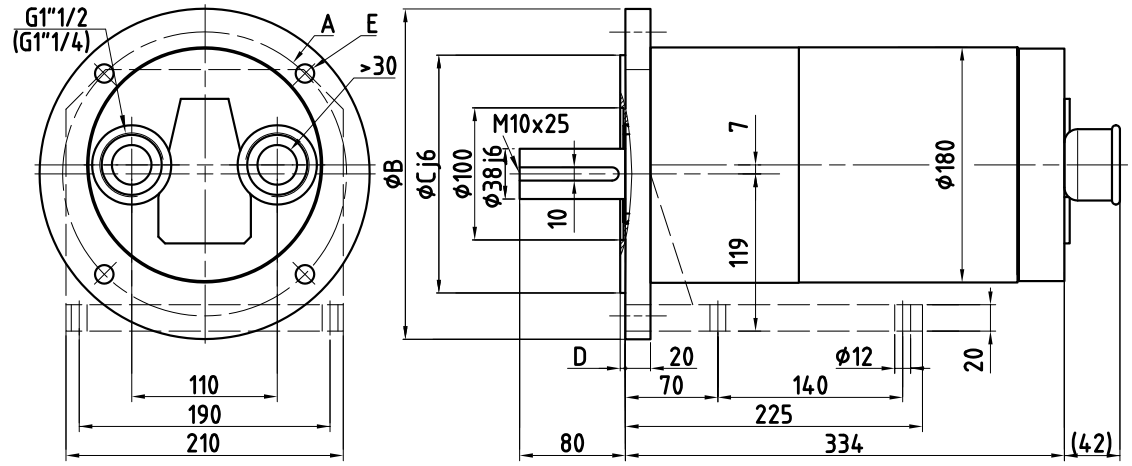

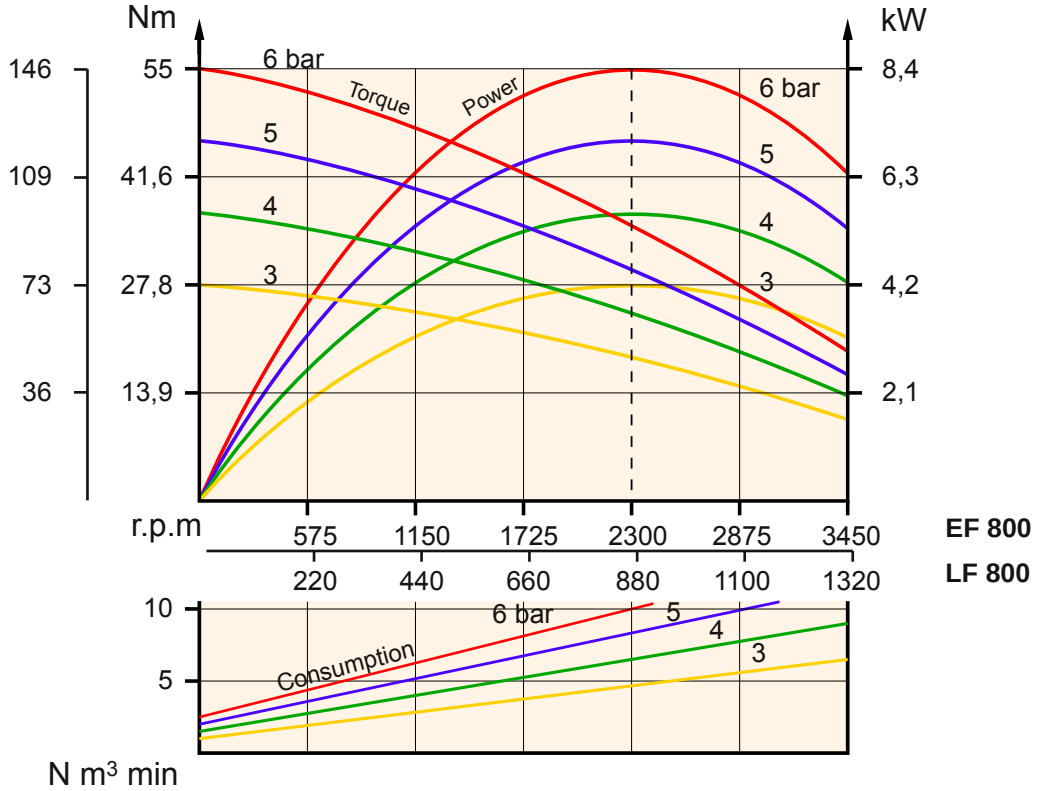

ferry PRODUITS
3, Allée des Grands Paquis - BP 60102 - F-54183 HEILLECOURT CEDEX
Tel : +33 (0)3 83 35 22 97 - Fax : +33 (0)3 83 32 47 73

BRAKE AIR MOTORS

Parking brake

Power 0.5 or 0.8 kW from 1020 to 26 r.p.m

Power-off brake (release pressure of 3 bar)

Same fittings as standard motors (Standardized flange and square)

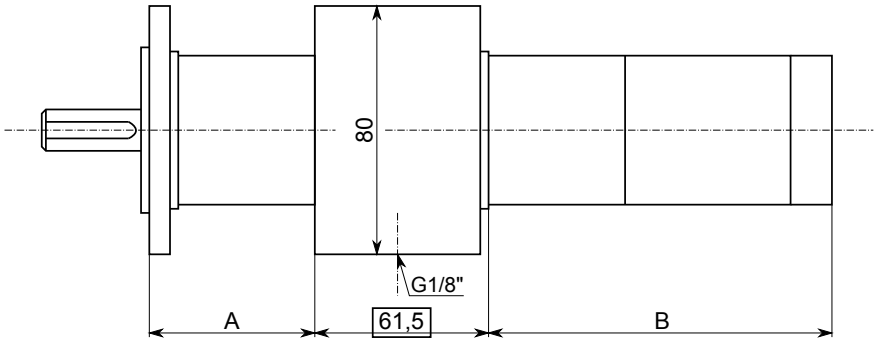

Overlength compared to the standard motor

Reference	Speed	A	B
NF 224 PM	200 to 1020 r.p.m	48	99
NF 226 PM	130 to 660 r.p.m	48	99
NF 224 24 PM	50 to 245 r.p.m	83	99
NF 224 24 24C PM	12 to 50 r.p.m	118	99
NF 22634 PM	30 to 140 r.p.m	131	99
NF 226 37 PM	18 to 85 r.p.m	131	99
NF 284 PM	200 to 1020 r.p.m	48	116
NF 286 PM	130 to 660 r.p.m	48	116
NF 284 24 PM	50 to 245 r.p.m	83	116
NF 286 34 PM	30 to 140 r.p.m	131	116
NF 286 37 PM	18 to 85 r.p.m	131	116

Technical datas and other dimensions on the technical sheet of each motor.

1- Combination Filter/Regulator and Lubricator (FRL)
2- 5/3 operation valve
3- Air motor
4- 3/2 operation valve
5- Brake

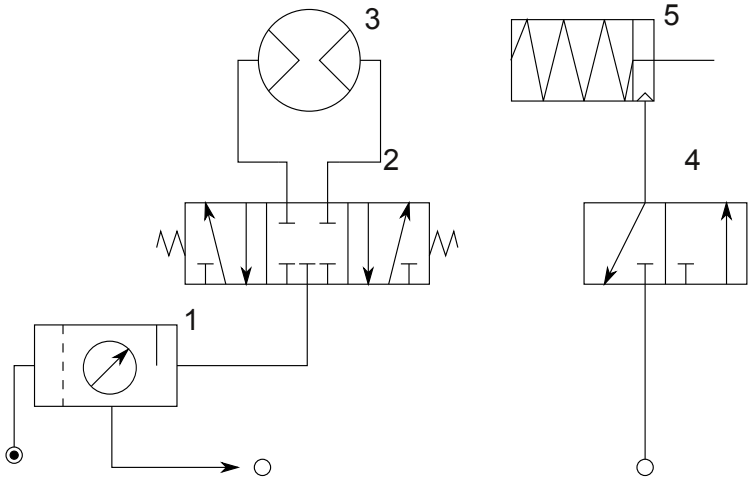

PNEUMATIC TIGHTENING UNITS

Range and dimensions

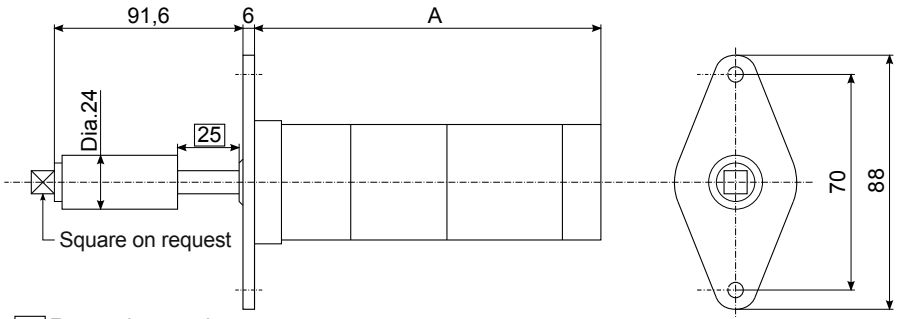

Retraction stroke

NOTE: See standard motors for other dimensions

Reference	Speed	Tightening torque	A
NF 224 BR	200 to 1020 r.p.m	1,5 to 8,7 Nm	148
NF 226 BR	130 to 660 r.p.m	2,2 to 13,5 Nm	148
NF 224 24 BR	50 to 245 r.p.m	5 to 35 Nm	184
NF 224 24 24C BR	12 to 50 r.p.m	8,4 to 50 Nm	218
NF 284 BR	200 to 1020 r.p.m	2,2 to 13,2 Nm	165
NF 286 BR	130 to 660 r.p.m	5 to 20 Nm	165
NF 284 24 BR	50 to 245 r.p.m	8,8 to 52,8 Nm	201

Our range of standard air motors gives tightening solutions up to 330 Nm.

FULL PNEUMATIC RELIABLE TIGHTENING

The new fully pneumatic reliable tightening system is realized on the basis of the particular skills of the FERRY air motors:

- The torque that is sensibly proportional to the inlet air pressure,
- The torque repeatability.

The system includes:

- The screwing motor with or without its retractable tip,
- The box **APCV** (pneumatic automation for screwing control).

This compact power supply can be installed alone at a few meters or fixed, it includes simple setting means.

The cycle is automatic after reception of a signal from a manual command or an automatic cycle. The screwing time is similar as a screwdriver with aleatory torque.

The result is we can ensure more or less 8% tightening.

Air motors series 100 are the basis for 8 to 15 Nm tightening, series 200 for 15 to 50 Nm and the motors series 300 for 40 to 140 Nm tightening.

On request we can realize crewing with much higher torques.

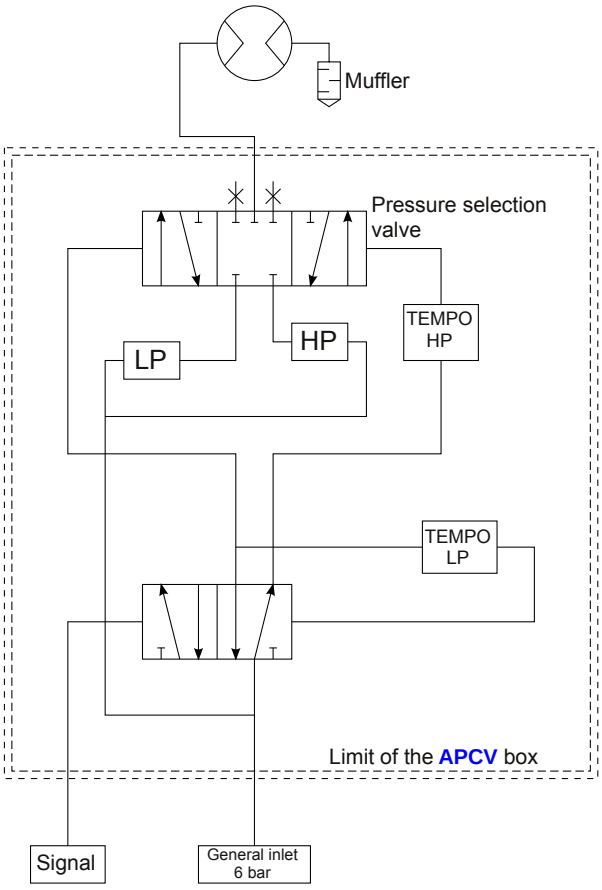

3, Allée des Grands Paquis - BP 60102 - F-54183 HEILLECOURT CEDEX
Tel : +33 (0)3 83 35 22 97 - Fax : +33 (0)3 83 32 47 73

DOUBLE ROTOR AIR MOTORS

■ The rotors **A** and **B** made with treated alloy steel, each has 10 high precision teeth machined with a special profile which increases the motor torque of 15%. These 2x10 teeth of rectangular section give a rotation more regular than the 4 or 6 alternative pistons or the 5 to 8 vanes. They wear almost nothing, even at high speed.

■ The caged needle bearings **C** rotate with controlled reduced clearance, on a treated alloy steel pin; sufficient lubrication is ensured by the oil fog in the compressed air. The high ratio "accepted load by the bearing" / "real load on the bearing" giving maximal longevity.

■ The shaft of the gear **A** and the axle **D** are perfectly parallel. Bores are made on a CNC machine giving an accuracy of 0.008 mm. The caged needle bearings **F** are also of amply dimensioned. The seal **H** prevents air-leaks from the motor.

■ The two positioning pins **J** align the assembly, ensuring the correct sealing of the rotors, the good support of bearings and of the reducer gears.

■ The housing, composed of a lid **L** and of a crank case **M**, is rigid and strong.

■ The essential issue of air-leaks has been solved efficiently. The clearance around the rotors corresponding to an adjustment quality of approximately H5-g4, could not however be obtained only by high precision during manufacturing. It is completed by final adjustment and sealed in the factory. The user should not worry about this setting when using.

■ The axial air-sealing of the rotors comes from two plates **N** with PTFE (Teflon). These parts and the automatic grinding allows the absorption of differential dilations while maintening this clearance at a few microns.

The radial sealing around the rotors is completed by two parts **P**, also covered with a special material created for aerospace industry, which never rub but just grazes over the rotors.

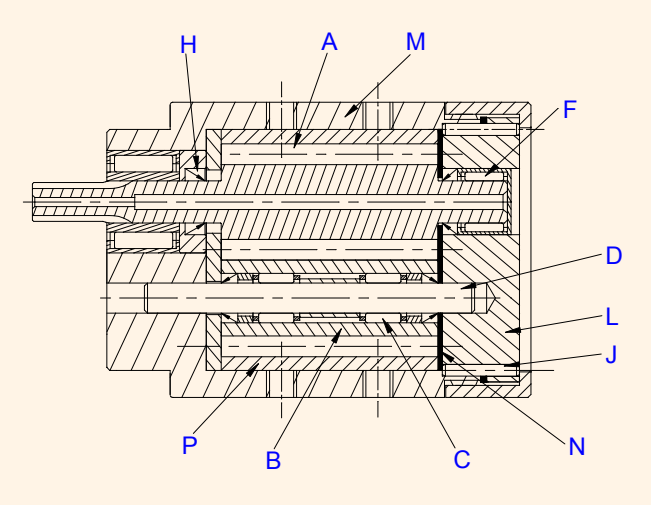

■ Each motor is runned in and checked before delivery. Any internal "leaks" is measured when the motor is stalled, the starting torque and the speed are checked to confirm that the motor gives the specified performances. The internal friction is so insignificant that the motor can start without load with pressure of 0.8 bar.

■ With this all rotative motor, there is no friction due to the centrifugal force, and no other alternative movement of vanes or pistons.

■

Integrated gearboxes: excepted the motors with the prefix "SF", where the shaft is in direct output, the other motors have integrated gearboxes with 1,2 or 3 reduction stages. For the first reduction stage, we have chosen the solution of parallel shafts keeping for the second stage the planetary gearbox which allows a high torque with a small diametric space.

The flexibility of our motors was used to provide a greater speed range while limiting the number of references.

Gears were built according to advanced technology which allows larger conveying of power.

The pinions in bigly resistant steel such as 35 NCD 16, 32 CDV 13, 30 CD 12, allow to exploit this possibility.

Lubricated with a long life grease (used for example in aerospace), they can work in all positions.

■

The shaft bearings are widely designed and allow important loads. The shaft in alloy steel with high wearing limit is nitrated on several motor models.

Load and longevity factor

■ With properly dry, clean and lubricated air, the motor part, itself, is almost hard-wearing, even in heavy duty conditions. Friction is greatly reduced and the loads on the performing materials used are moderate.

■ The life span of needle and ball bearings and gears depends on working conditions. The bearings have been defined according to the standard methods taking into consideration "moderate shocks" in intensive use, the motor working with 6 bar pressure. The reliability is that of high quality mechanisms.

■ If the motor is subjected to shocks and frequent stops and starts, in order to conserve the same life span (generally higher than other technologies), we suggest to use it with a lower pressure, for example 3 or 4 bar, depending on the requirement. From 2 bar, the power becomes approximately proportional with the inlet air pressure.

■ Our experience shown that these motors can be subsided to hard working conditions, for example : rashly changing the direction of rotation, 3000 starts per hour, etc.

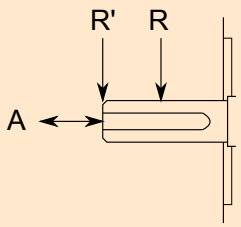

R: Radial load at the middle of the shaft
R': Radial load at the end of the shaft
A: Axial load (push and pull)

Radial and/or axial load admitted on the shaft

The motor torque transmitted by a gear, a pulley, a cutting or abrasive tool, induces on the shaft a radial realign equal to the torque expressed in m.N, divided by the radius in m, and multiplied, in a first estimate, by a specific coefficient:

■ Gear, chain sprocket, pulley of notch belt: k= 1.1 to 1 .2

■ Trapezoidal pulley: about 2.5
Flat pulley or elastomeric roller: 4 to 6

■ Tool: of about 3 to 8

The minimal diameter of this tool to avoid excessive reaction on the shaft is:

$$Ø\ (mm) \geq \frac{K \times 2000 \times \text{max. Torque (Nm)}}{\text{Accepted radial load (N)}}$$

N.B. :

■ Avoid that the application plane of the load exceed the shaft end.

■ The loads indicated are at the speed at maximum power.

■ Take into consideration any possible shocks and provide elastic coupling if necessary. Even during a short time, must not exceed 2.5 times the values indicated.

■ Even respecting maximum loads indicated in the table below, it is necessary to control the shaft bearings, in preference by our care, after 2000 hours of effective using. This table gives single or combined and axial or radial load, according to the scheme below.

Type	A (N)	R (N)	R' (N)	A+R		A+R'	
				A (N)	R (N)	A (N)	R' (N)
NF 100	250	190	150	150	110	150	80
NF 114	530	500	400	420	260	420	210
NF 116	600	540	430	450	330	450	270
NF 114 14	980	760	600	600	550	600	460
NF 114 16	1100	850	680	700	630	700	510
NF 116 16	1280	960	760	800	700	800	580
SF 200 B	120	100	70	70	70	70	60
NF 200	650	500	400	350	350	350	300
NF 224	1200	900	700	650	650	550	550
NF 226	1400	1050	750	750	750	650	650
NF 224 24	1900	1400	750	1000	1000	900	750
NF 224 24 24 C	1900	1400	750	1000	1000	900	750
NF 226 34	5000	3000	1500	5000	3000	5000	1500
NF 226 37	5000	3000	1500	5000	3000	5000	1500
NF 226 34 36	5000	3000	1500	5000	3000	5000	1500
NF 280	650	500	400	350	350	350	300
NF 284	1200	900	700	650	650	550	550
NF 286	1400	1050	750	750	750	650	650
NF 284 24	1900	1400	750	1000	1000	900	750
NF 286 34	5000	3000	1500	5000	3000	5000	1500
NF 286 37	5000	3000	1500	5000	3000	5000	1500
SF 300	200	200	150	150	150	120	120
NF 300	1500	900	700	800	800	800	400
NF 308	2000	1100	800	1000	1000	1000	600
NF 334	3300	30003	1500	2500	2500	3000	1500
NF 337	3800	3000	1500	3000	3000	3500	1500
NF 334 34	5000	3000	1500	5000	3000	5000	1500
NF 334 36	5000	3000	1500	5000	5000	5000	1500

Type	A (N)	R (N)	R' (N)	A+R		A+R'	
				A (N)	R (N)	A (N)	R' (N)
SF 400	550	450	400	350	350	300	300
EF 400	2800	2000	1500	2000	1200	2000	1000
XEF 400	3000	2000	1500	2200	1200	2200	1000
LF 400	3500	2500	2000	2500	1500	2000	1200
EF 434	4000	3000	1500	4000	2500	4000	1500
LF 434	4000	3000	1500	4000	2500	4000	1500
SF 500	550	450	400	350	350	300	300
EF 500	2500	1800	1800	1800	1200	1800	1000
LF 500	3000	2200	2000	2000	1500	2000	1100
EF 534	4000	3000	1500	4000	2500	4000	1500
LF 534	4000	3000	1500	4000	2500	4000	1500
SF 600	600	600	500	500	500	400	400
EF 600	3000	2200	1600	2000	1500	2000	1000
LF 600	4000	2500	1900	2200	1600	2200	1200
EF 675	7400	5100	3500	4400	3300	4400	2400
LF 675	7400	5100	3500	4400	3300	4400	2400
SF 700	500	500	450	400	400	350	350
EF 700	2800	2000	1500	1800	1400	1800	1000
LF 700	3500	2400	1800	2000	1500	2000	1200
EF 775	7400	5100	3500	4400	3300	4400	2400
LF 775	7400	5100	3500	4400	330	4400	2400
2XE7X	7500	4000	2500	5000	3000	4000	2000
SF 800	1400	1200	1000	850	750	900	600
EF 800	7500	4000	2500	5000	3000	4000	2000
LF 800	10000	4500	2500	6000	3000	5000	2500

ferry PRODUITS
3, Allée des Grands Paquis - BP 60102 - F-54183 HEILLECOURT CEDEX
Tel : +33 (0)3 83 35 22 97 - Fax : +33 (0)3 83 32 47 73

Installation and pneumatic connection

■ ***For minimal losses, we insist the importance of the choice of pipes, fittings, valves and other accessories***.

To benefit of the exceptional performance and optimum efficiency of our motors, take into consideration our recommendations, or you can consult us for special cases.

The data sheets for each motor indicate the minimum flow of the distributor and piping, for admission and exhaust. There are also the nominal inside diameter of the pipe and connection.

Our motors are supplied with adaptors with increased lead diameter, with one size above the nominal connection of the motor. This connection must stay in place, except for special cases of underutilization of the motor. The thread is internal gas pipe thread (NF E 03004).

To reduce the load on the motor by dilatation of the rigid pipes, we suggest to connect a flexible tube or semi-rigid on the motor (Mark 10 on the diagrams).

■ ***WARNING :*** Some couplings in steel, brass or plastic materials have a small real inside diameter: the greater part of the "quick couplers" have an excessive loss, except unions that with "ball" that are direct full flow.

General set-up diagrams : Diagrams A, B and C

■ **Upstream air valve :** With full flow, the main piping on slope, with drain. Bleeds (mark 2) should be OVER the conduit. The diameter is always BIGGEST POSSIBLE (mark 1). The additional cost is very small compared to savings of compressed air.

■ **Filter-Regulator-Lubricator :** Mark 3. Within 3 m of the motor. The suppliers of these devices indicate a loss of pressure due to the flow. Chosing the biggest saves the energy.

■ **Filter :** Theshold 30 microns. Must be purged from time to time. The filtering in the compressor does not release this device.

■ **Regulator :** Pressure decreases a bit with flow, more or less depending on the type and brand.
The small gauge located on the regulator has only a relative value because it is upstream of other factors of losses.

Lubrication by oil fog is essential

The oil drip in the lubricator is visible and adjustable. Adjusting to 3 to 8 drops per minute and per KW of effectively used power.

Silencer : Mark 5. Generally essential, we provide efficient silencers adapted for our motors. Beware of some silencers whose flow capacity is too small, without any link with the connction diameter.

We can also provide efficient oil recuparator silencers.

In a normal environment, it sufficiently protects the inside of the motor when it is stationary.

Outside or in a corrosive environment, it is necessary that the distributor is in position "closed neutral" to exhaust.

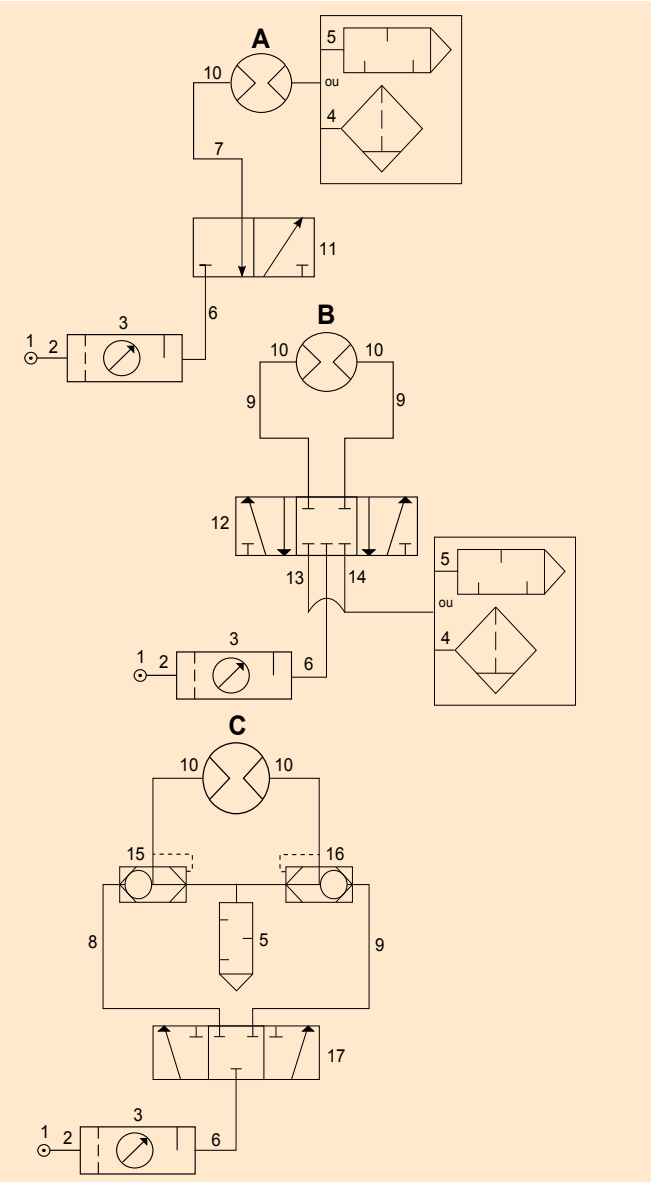

DOUBLE ROTOR AIR MOTORS

Control and remote control

An air motor with reliable start like ours, can be remotely operated and integrated in a logical system like a cylinder single action (for non-reversible motor) or double acting (for reversible motor).

It is necessary to take account of the flow indicated for the choice of connections (diameter and length of the tubes, flow of the equipments, minimum exhaust backpressure: Δp defines the torque of the motor).

Drawing A, B and C

Three typical cases of connection, A: one single direction of rotation, B and C: reversible rotation. Several other variants may respond to the problems of motorization.

■ **Reversible motor :** The connections (8.9) are used alternatively for inlet and exhaust. Both tubes have the same internal diameter suggested for the exhaust.

■ **Control valve :** Placed close to the motor, the distributor allows an instant response. The low moment of inertia of our motors and their high starting torque allow, if desired, extraordinary accelerations.

A distributor with "closed neutral" near the motor allows stopping it very quickly. Inversely, we can insert in-ine, on levels 7, 8 or 9 of the schemes, a "capacity", with possibly a pointer adjustment, to have a progressive start or stop, or also for example a deferred brake control.

Drawing A

(Non reversible motor)
The mark 11 can be a simple hand-operated valve, an electro valve or remote distributor. Its flow will be that of the inlet of the motor.

Drawing B

(Reversible motor)
Controlled by two 3-ways valves, or a 4-ways distributor (two or three positions according to need) and 4 or 5 holes (called "5.2" or "5.3"), mark 12, (same principle as for a double acting cylinder). Exhausts (marks 13 and 14) are connected to the muffler.

Drawing C

(Reversible operation as B) With distributor away from the motor (2 ways, 3 holes, mark 17) and exhaust close to the motor.

Muffler

Our motors are relatively low-noise, with a muffler. The noise also depends on installation conditions and environment. The noise level of the motor has not absolute value but just a comparative value.
For example, the same motor that produces 78 dB outdoors or in a sound-proof room can produce 90 dB if it is set on an iron barrel.

Remember: the measurement scale is logarithmic, so reduce noise from 80 to 72 dB gain is not 10%, but 84%. Our motors are quieter under load than free with the same speed.

It is recommended to choose a muffler with two or three sizes above the nominal diameter of the motor connection (consult us).

Accessories

Silencer

Generally indispensable, efficient and adapted to our motors.

Reference	ØA
FS 04	1/4"
FS 06	3/8"
FS 08	1/2"
FS 12	3/4"
FS 16	1"
FS 20	1"1/4

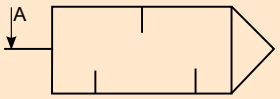

Oil recuperator silencer

Collects lubrication oil in the air up to ≈97%

Reference	ØA
FRH 08	1/2"
FRH 12	3/4"
FRH 16	1"
FRH 20	1"1/4

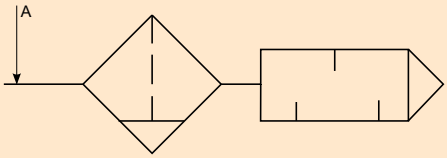

Air Treatment Group

Filter: Filter and dehumidifies air by the slight expansion of the air.
Regulator: modulates the torque of the motor and can be used for speed control.
Lubricator: For oil mist, necessary for bearings.

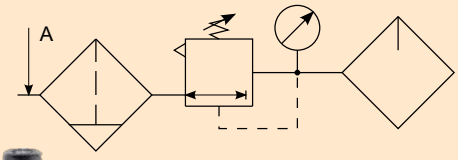

Reference	ØA
FGTA 04	1/4"
FGTA 06	3/8"
FGTA 08	1/2"
FGTA 12	3/4"
FGTA 16	1"

On request, we can offer you the necessary elements for the automation of your motor.

ferry PRODUITS
3, Allée des Grands Paquis - BP 60102 - F-54183 HEILLECOURT CEDEX
Tel : +33 (0)3 83 35 22 97 - Fax : +33 (0)3 83 32 47 73

DOUBLE ROTOR AIR MOTORS

	Type	Maximum power			Optimal speeds			Starting torque	Nominal speed	Housing Ø	Weight	Page
		kW	at	r.p.m	r.p.m			Nm	Nm	mm	kg	
0,22 kW	NF 100	0,22	-	7850	1570	-	7300	0,55	0,3	36	0,45	7
	NF 114	0,22	-	2020	400	-	1880	2,1	1,1	36	0,75	8
	NF 116	0,22	-	1440	290	-	1340	3	1,5	36	0,75	8
	NF 114 14	0,22	-	520	105	-	485	8,3	4	36	0,9	9
	NF 114 16	0,22	-	370	75	-	345	11,6	5,7	36	0,9	9
	NF 116 16	0,22	-	265	55	-	245	16,4	7,9	36	0,9	10
0,55 kW	SF 200 B	0,55	-	18000	4000	-	18000	0,43	0,3	49	1	11
	NF 200	0,55	-	4300	850	-	4000	1,9	1,2	49	1,1	12
	NF 224	0,53	-	1020	200	-	950	7,8	5	49	1,4	13
	NF 226	0,53	-	660	130	-	600	11,7	7,7	49	1,4	13
	NF 224 24	0,53	-	245	50	-	210	31,5	20,7	49	1,8	14
	NF 224 24 24 C	0,21	-	60	12	-	50	44,5	33,4	49	2,2	15
	NF 226 34	0,53	-	140	30	-	130	54	36,1	77	3,6	16
	NF 226 37	0,53	-	85	18	-	80	88	59,5	77	3,7	16
	NF 226 34 36	0,35	-	26	5	-	24	198	128	77	5,6	17
0,8 kW	NF 280	0,8	-	4300	850	-	4000	2,75	1,8	49	1,3	18
	NF 284	0,8	-	1020	200	-	950	11,8	7,5	49	1,6	19
	NF 286	0,8	-	660	130	-	600	18	11,6	49	1,6	19
	NF 284 24	0,8	-	245	50	-	210	47	31,2	49	2	20
	NF 286 34	0,8	-	140	30	-	130	80	54,6	77	3,8	21
	NF 286 37	0,8	-	85	18	-	80	131	89,9	77	3,8	21
1,3 kW	SF 300	1,32	-	12000	2500	-	11000	1,55	1,1	70	1,7	22
	NF 300	1,3	-	3100	650	-	3000	5,9	4	70	2,9	23
	NF 308	1,3	-	1550	300	-	1500	11,7	8	91-70	3,7	24
	NF 334	1,3	-	700	150	-	650	26	17,7	77	3,9	25
	NF 337	1,3	-	430	80	-	400	42	28,9	77	4,1	25
	NF 334 34	1,25	-	150	30	-	145	113	79,6	88	5,8	26
	NF 334 36	1,25	-	120	25	-	110	142	99,5	88	5,8	26
2,1 kW	SF 400	2,15	-	7600	1400	-	7000	3,6	2,7	105	3,8	27
	EF 400	2,1	-	2250	450	-	2000	12,1	8,9	105	6	28
	XEF 400	2,1	-	1850	400	-	1700	14,4	10,8	105	6	28
	LF 400	2,1	-	1200	250	-	1100	22	16,7	105	6,2	29
	EF 434	2,05	-	500	100	-	450	53	39,1	108	8,1	30
	LF 434	2,05	-	270	55	-	250	98	72,5	108	8,4	30
3,1 kW	SF 500	3,15	-	7600	1400	-	7000	5,4	3,9	105	4,8	31
	EF 500	3,1	-	2250	450	-	2000	18	13,1	105	7	32
	LF 500	3,1	-	1200	250	-	1100	33	24,6	105	7,2	32
	EF 534	3	-	500	100	-	450	78	57,3	108	9,1	33
	LF 534	3	-	270	55	-	250	144	106,1	108	9,4	33
4,1 kW	SF 600	4,1	-	6000	1100	-	5500	9,9	6,5	132	9	34
	EF 600	4	-	2050	400	-	1900	28,4	18,6	132	12,5	35
	LF 600	4	-	1050	180	-	900	55	36,3	132	13,1	35
	EF 675	4	-	440	80	-	420	126	86,8	132	23,4	36
	LF 675	4	-	230	40	-	200	243	166	132	24	36
5,1 kW	SF 700	5,1	-	6000	1100	-	5500	12,1	8,1	132	10,4	37
	EF 700	5	-	2050	400	-	1900	35	23,3	132	13,9	38
	LF 700	5	-	1050	180	-	900	69	45,5	132	14,5	38
	EF 775	4,9	-	440	85	-	420	153	106,3	132	24,8	39
	LF 775	4,9	-	230	40	-	200	297	203,4	132	25,4	39
	2XE7X	10		1700	320	-	1600	82	56,1	264	34	40
8,6 kW	SF 800	8,6	-	4500	800	-	4000	27	18,2	180	27	41
	EF 800	8,4	-	2300	400	-	2000	53	34,8	180	30	42
	LF 800	8,4	-	880	150	-	800	138	91,1	180	31	42
Brake Air Motors												43
Pneumatic Tightening Units												44
AVERAGE PERFORMANCE UNDER 6 BAR												

The indicated values and dimensions are therical.
In a permanent effort to improve our products, we can't guarantee the sustainability of technical data contained in our catalogs.

ferry PRODUITS
3, Allée des Grands Paquis - BP 60102 - F-54183 HEILLECOURT CEDEX
Tel : +33 (0)3 83 35 22 97 - Fax : +33 (0)3 83 32 47 73

DOUBLE ROTOR AIR MOTORS

Codification of our motors

STANDARD | **OPTIONS**

EX | NF | 224 | PM | F | 65 | SP | D | P | O

ATEX II 2 GD c T4 to T6

Compulsory in case of ATEX certification.

DESIGNATION

SF - NF - EF - XEF - LF - 2XE (See catalogue).

TYPE

100, 200, 280, 300, 400, 500, 600, 700, 800 (See catalogue).

ADAPTATIONS

RXU	Mounting with an additional store-bought gearbox.
PM	With parking brake.
BZX	With drill chuck.
BR	With retractable tip for tightening unit.

ATTACHMENTS

F	Flange	Note: For series 100, 200 and 280 without indication, the motor will be delivered without attachment.
E	Square	

ONLY FOR FLANGES

Hole spacing diameter

OPTIONS

Must be written in case of option

ON THE SHAFT

D1	Shaft Ø indicated between ( )
D2	Jacob cone
D3	Threaded (to be precised)
D4	Modified Ø and/or length
D5	Protected shaft (chemical Kanigen)
D6	Square shaft (to be precised)
D7	Shaft + spindle (to be precised)

ON HOUSING

P1	Polyurrthane painting
P2	Heat-shrinkable tube
P3	High temperature motor
P4	Low temperature motor
P5	Stainless steel protection

HOLES

OL	Side holes
OM	Modified holes

The company **Ferry** relies on its technical and commercial departments as well as those of its French and European partners.

In addition to the commercial and technical supply, the company make available:

- the **products catalogue**
- the presentation **CD** of the company
- the **website** www.ferry-produits.com
- a 3D **library** of our motors

ferry PRODUITS
3, Allée des Grands Paquis - BP 60102 - F-54183 HEILLECOURT CEDEX
Tel : +33 (0)3 83 35 22 97 - Fax : +33 (0)3 83 32 47 73

DOUBLE ROTOR AIR MOTORS

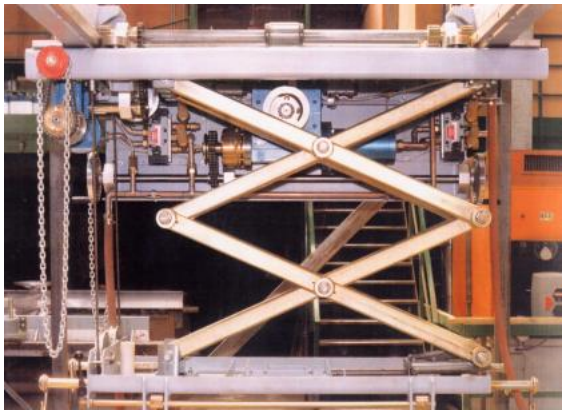

Lifting and Handling

Trolley motorization

Tightening in ATEX atmosphere

Laying of fiber optic

On-site machining

ATEX II 2 GD c T4-T6

Robotics

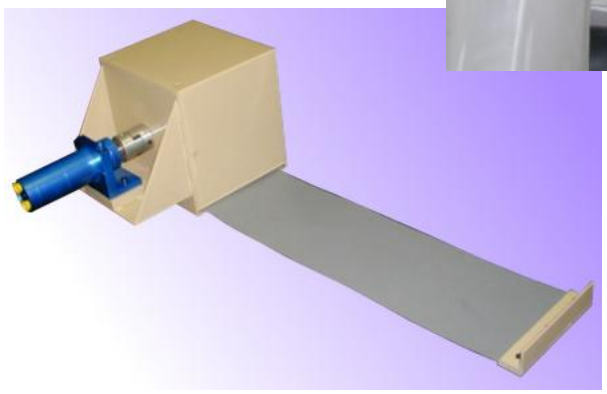

Reel motorization

Internal grinding of tubes

ferry PRODUITS
3, Allée des Grands Paquis - BP 60102 - F-54183 HEILLECOURT CEDEX
Tel : +33 (0)3 83 35 22 97 - Fax : +33 (0)3 83 32 47 73

Your contact:

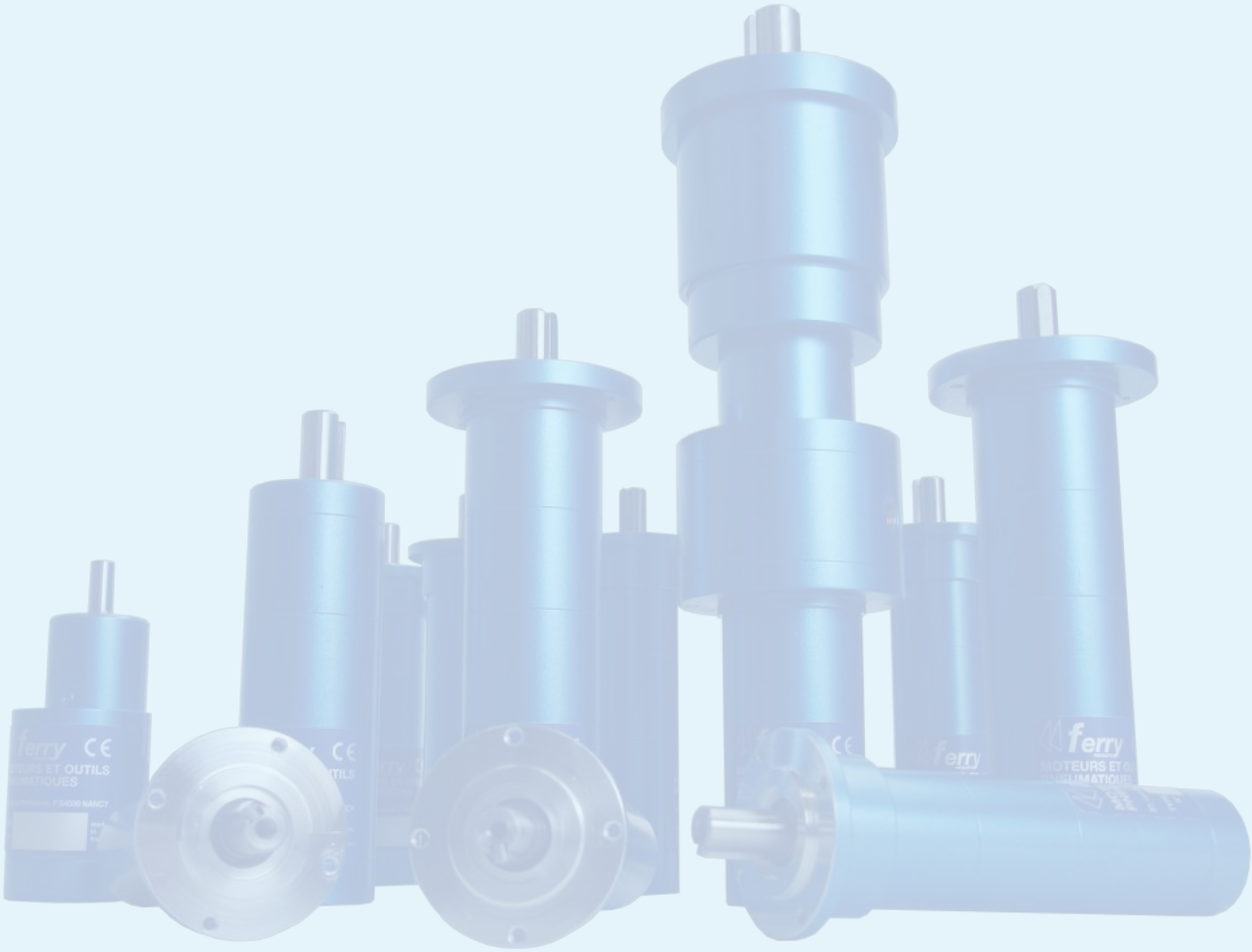

3, Allée des Grands Paquis
BP 60102
54183 HEILLECOURT CEDEX
FRANCE
Tel : +33 (0)3 83 35 22 97
Fax: +33 (0)3 83 32 47 73
E-mail : ferry@ferry-produits.com

ferry PRODUITS

www.ferry-produits.com
www.ferry-products.com